PRO-FORM®
ENDURANCE 420 E

Model No. PFEVEL49717.1
Serial No. _____

Write the serial number in the space above for reference.

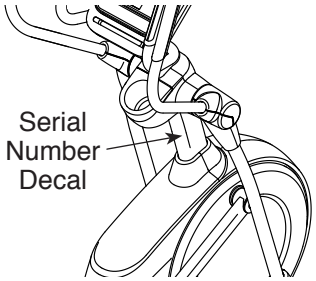

CUSTOMER SERVICE

UNITED KINGDOM
Call: 0330 123 1045
From Ireland: 053 92 36102
Website: iconsupport.eu
E-mail: csuk@iconeurope.com
Write:
ICON Health & Fitness, Ltd.
Unit 4, Westgate Court
Silkwood Park
OSSETT
WF5 9TT
UNITED KINGDOM

AUSTRALIA
Call: 1800 993 770
E-mail: australiacc@iconfitness.com
Write:
ICON Health & Fitness
PO Box 635
WINSTON HILLS NSW 2153
AUSTRALIA

⚠ CAUTION

Read all precautions and instructions in this manual before using this equipment. Keep this manual for future reference.

USER'S MANUAL

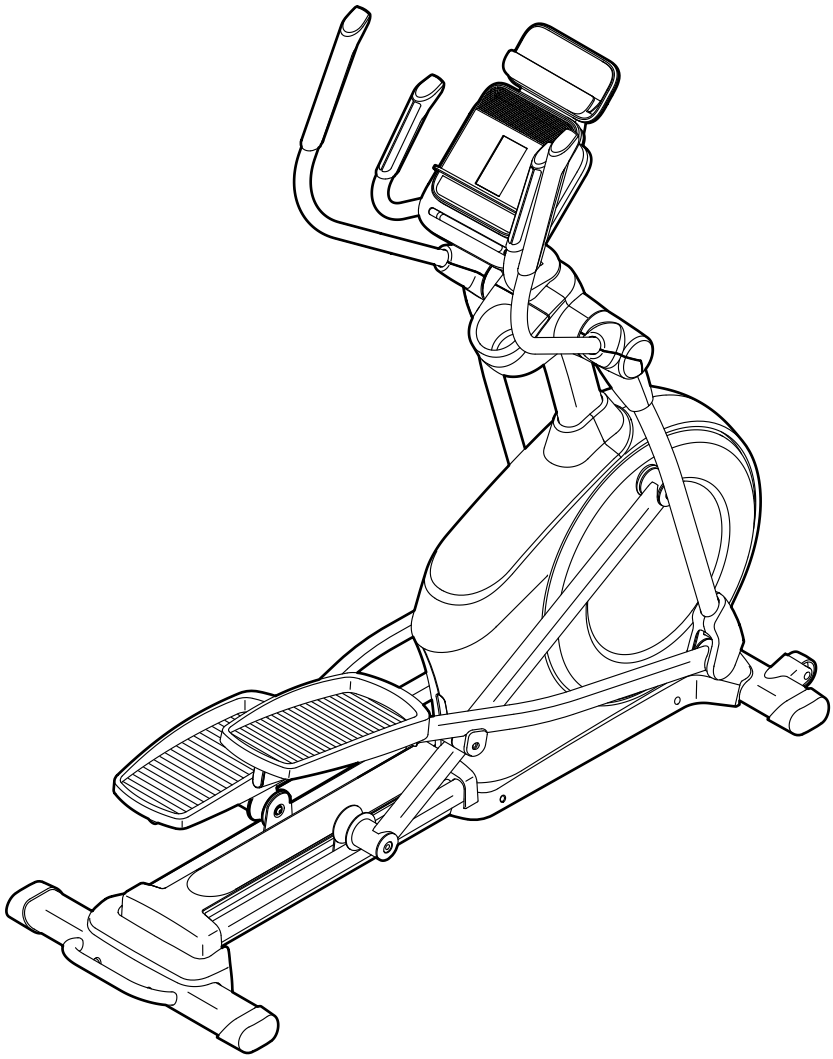

iconeurope.com

TABLE OF CONTENTS

WARNING DECAL PLACEMENT 2
IMPORTANT PRECAUTIONS 3
BEFORE YOU BEGIN 4
PART IDENTIFICATION CHART 5
ASSEMBLY 6
HOW TO USE THE ELLIPTICAL 15
MAINTENANCE AND TROUBLESHOOTING 23
EXERCISE GUIDELINES 25
PART LIST 27
EXPLODED DRAWING 29
ORDERING REPLACEMENT PARTS . . . . . Back Cover
RECYCLING INFORMATION . . . . . Back Cover

WARNING DECAL PLACEMENT

This drawing shows the location(s) of the warning decal(s). **If a decal is missing or illegible, see the front cover of this manual and request a free replacement decal. Apply the decal in the location shown.** Note: The decal(s) may not be shown at actual size.

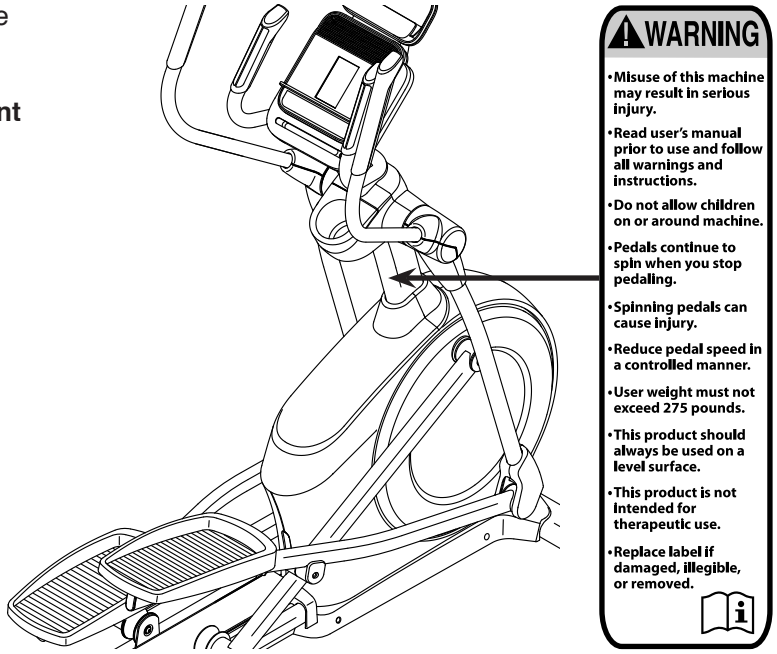

PROFORM and IFIT are registered trademarks of ICON Health & Fitness, Inc. App Store is a trademark of Apple Inc., registered in the U.S. and other countries. Android and Google Play are trademarks of Google Inc. The BLUETOOTH® word mark and logos are registered trademarks of Bluetooth SIG, Inc. and are used under license. IOS is a trademark or registered trademark of Cisco in the U.S. and other countries and is used under license.

IMPORTANT PRECAUTIONS

⚠ WARNING: To reduce the risk of serious injury, read all important precautions and instructions in this manual and all warnings on your elliptical before using your elliptical. ICON assumes no responsibility for personal injury or property damage sustained by or through the use of this product.

1. It is the responsibility of the owner to ensure that all users of the elliptical are adequately informed of all precautions.
2. Before beginning any exercise program, consult your physician. This is especially important for persons over age 35 or persons with pre-existing health problems.
3. The elliptical is not intended for use by persons with reduced physical, sensory, or mental capabilities or lack of experience and knowledge, unless they are given supervision or instruction about use of the elliptical by someone responsible for their safety.
4. Use the elliptical only as described in this manual.
5. The elliptical is intended for home use only. Do not use the elliptical in a commercial, rental, or institutional setting.
6. Keep the elliptical indoors, away from moisture and dust. Do not put the elliptical in a garage or covered patio, or near water.
7. Place the elliptical on a level surface, with at least 3 ft. (0.9 m) of clearance in the front and rear of the elliptical and 2 ft. (0.6 m) on each side. To protect the floor or carpet from damage, place a mat under the elliptical.
8. Inspect and properly tighten all parts each time the elliptical is used. Replace any worn parts immediately.
9. Keep children under age 13 and pets away from the elliptical at all times.
10. The elliptical should not be used by persons weighing more than 275 lbs. (125 kg).
11. Wear appropriate clothes while exercising; do not wear loose clothes that could become caught on the elliptical. Always wear athletic shoes for foot protection while exercising.
12. Hold the handlebars or the upper body arms when mounting, dismounting, or using the elliptical.
13. The heart rate monitor is not a medical device. Various factors may affect the accuracy of heart rate readings. The heart rate monitor is intended only as an exercise aid in determining heart rate trends in general.
14. The elliptical does not have a freewheel; the pedals will continue to move until the flywheel stops. Reduce your pedaling speed in a controlled way.
15. Keep your back straight while using the elliptical; do not arch your back.
16. Over exercising may result in serious injury or death. If you feel faint, if you become short of breath, or if you experience pain while exercising, stop immediately and cool down.

BEFORE YOU BEGIN

Thank you for selecting the revolutionary PROFORM® ENDURANCE 420 E elliptical. The ENDURANCE 420 E elliptical provides an impressive selection of features designed to make your workouts at home more effective and enjoyable.

For your benefit, read this manual carefully before you use the elliptical. If you have questions after reading this manual, please see the front cover of this manual. To help us assist you, note the product model number and serial number before contacting us. The model number and the location of the serial number decal are shown on the front cover of this manual.

Before reading further, please familiarize yourself with the parts that are labeled in the drawing below.

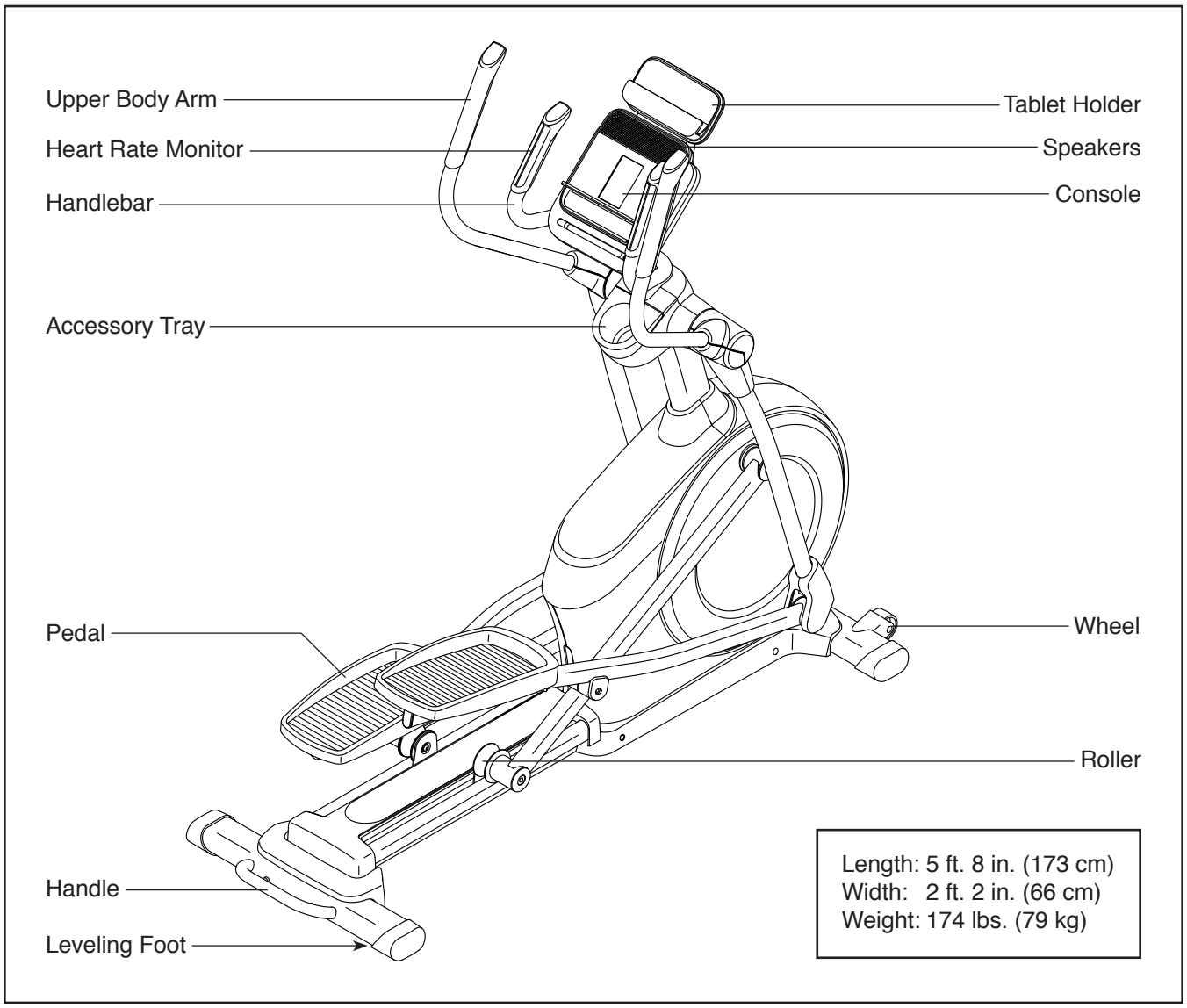

PART IDENTIFICATION CHART

Use the drawings below to identify the small parts needed for assembly. The number in parentheses below each drawing is the key number of the part, from the PART LIST near the end of this manual. The number following the key number is the quantity needed for assembly. **Note: If a part is not in the hardware kit, check to see if it has been preassembled. Extra parts may be included.**

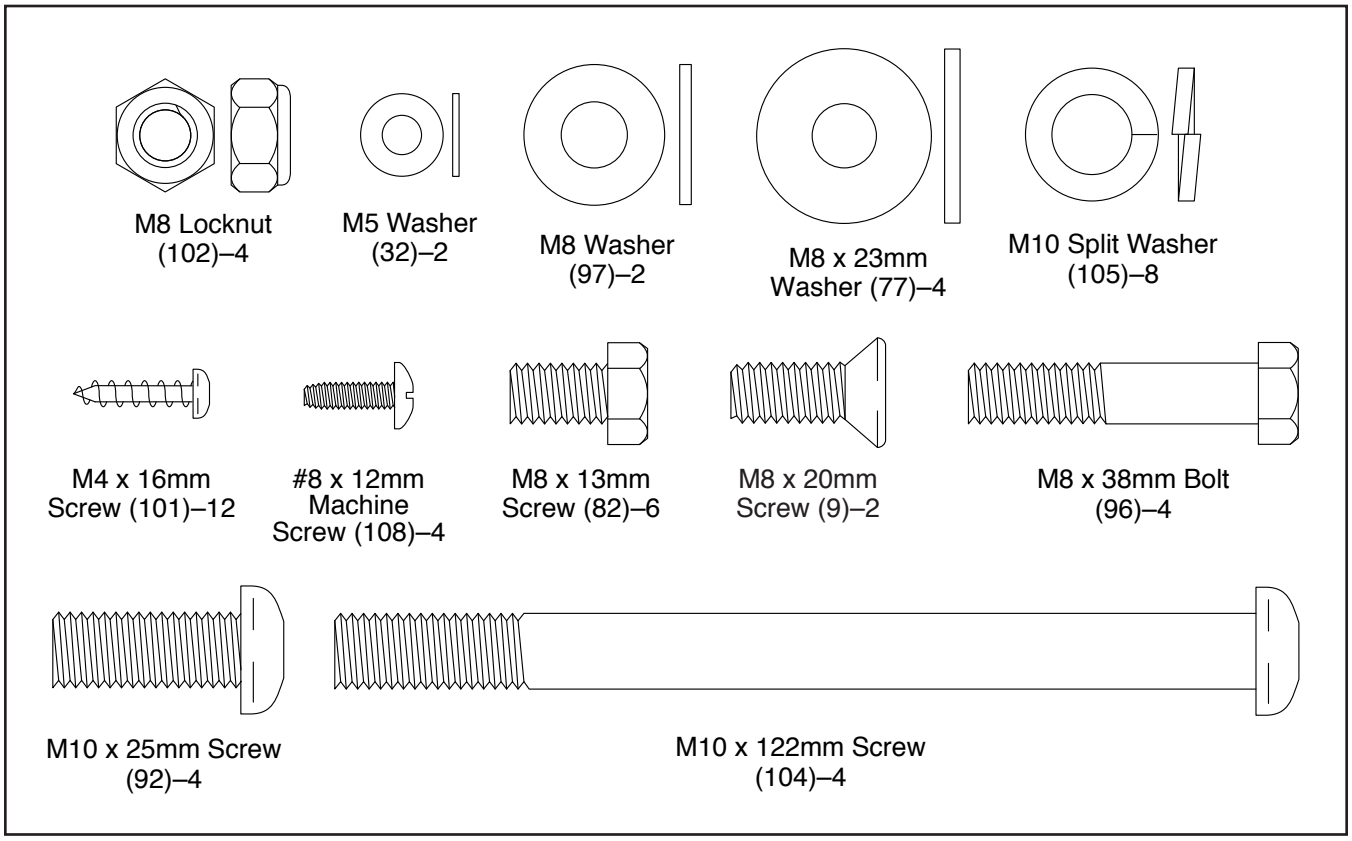

ASSEMBLY

- Assembly requires two persons.
- Place all parts in a cleared area and remove the packing materials. Do not dispose of the packing materials until you finish all assembly steps.
- Left parts are marked “L” or “Left” and right parts are marked “R” or “Right.”
- To identify small parts, see page 5.
- In addition to the included tool(s), assembly requires the following tools:

  one Phillips screwdriver 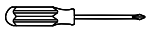

  one rubber mallet

  Assembly may be easier if you have a set of wrenches. To avoid damaging parts, do not use power tools.

1. **To register your product and activate your warranty in the UK,** go to iconsupport.eu. If you do not have internet access, call Customer Service (see the front cover of this manual).

   To register your product and activate your warranty in Australia, email or post the following information to the email address or postal address on the front cover of this manual.
   - your receipt (keep a copy)
   - your full name, address, and telephone number
   - the model number, serial number, and name of your product (see the front cover of this manual)

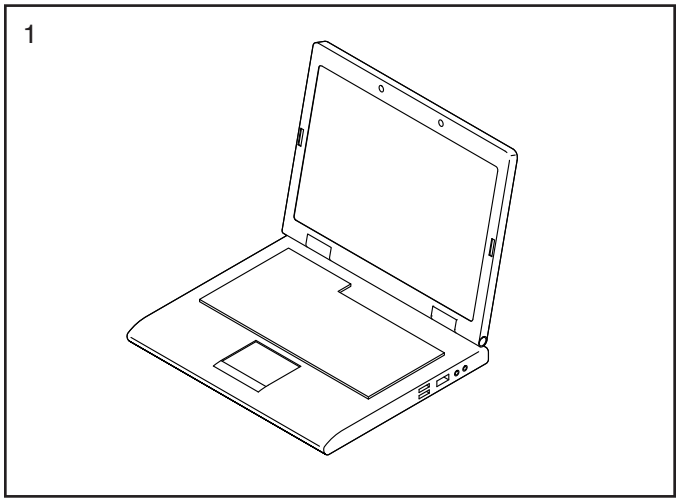

2. With the help of a second person, place some of the packing materials (not shown) under the rear of the Frame (1). **Have the second person hold the Frame to prevent it from tipping while you complete this step.**

   Attach the Rear Stabilizer (2) to the Frame (1) with two M10 x 122mm Screws (104) and two M10 Split Washers (105).

   Then, remove the packing materials from under the rear of the Frame (1).

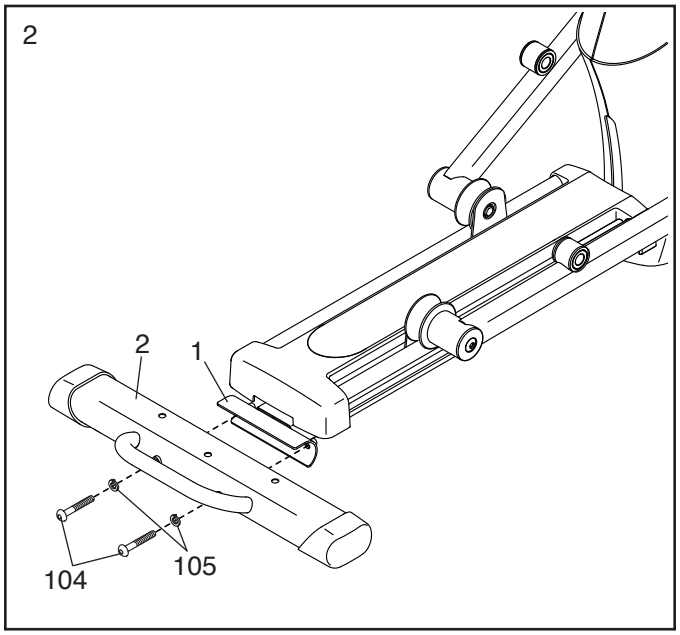

3. Press the Cover Mounts (106) on the underside of the Rear Stabilizer Cover (15) into the Rear Stabilizer (2).

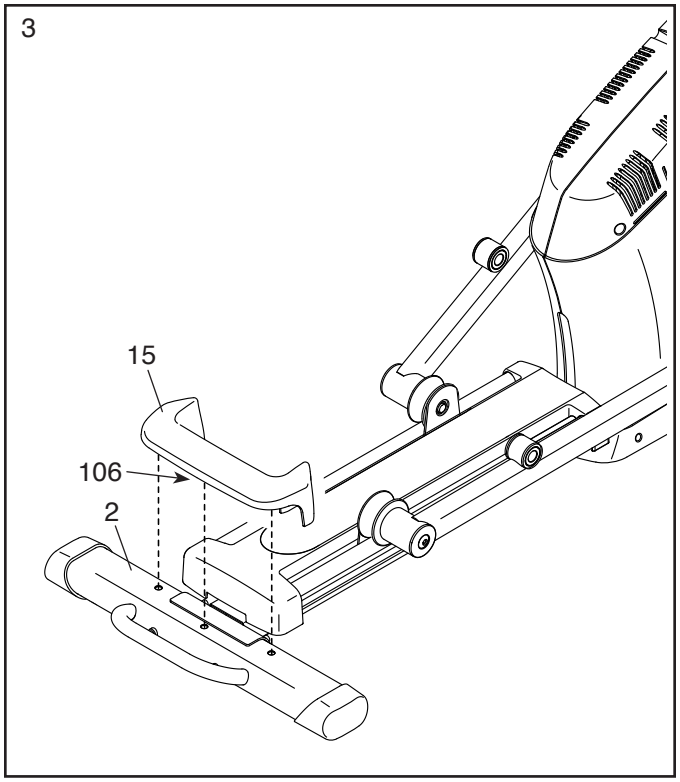

4. With the help of a second person, place some of the packing materials (not shown) under the front of the Frame (1). **Have the second person hold the Frame to prevent it from tipping while you complete this step.**

   Attach the Front Stabilizer (6) to the Frame (1) with two M10 x 122mm Screws (104) and two M10 Split Washers (105).

   Then, remove the packing materials from under the front of the Frame (1).

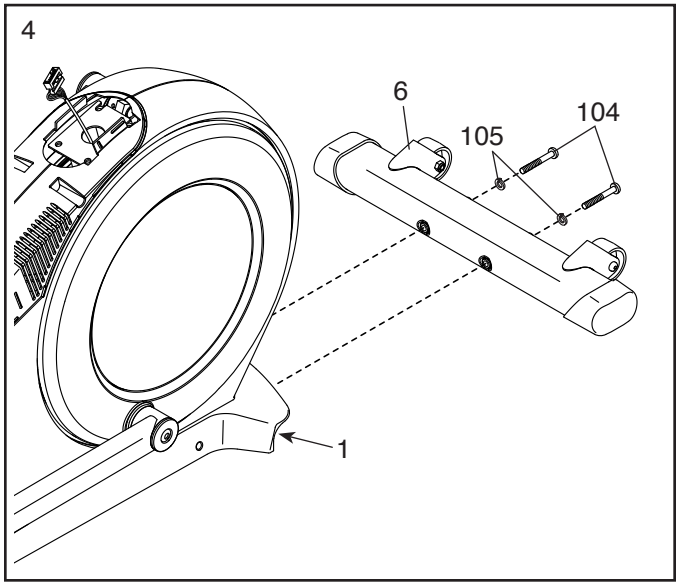

5. Orient the Upright (4) as shown. Have a second person hold the Upright near the Frame (1).

   See the inset drawing. Locate the wire tie (A) in the lower end of the Upright (4). Tie the wire tie to the Main Wire (48). Then, pull the upper end of the wire tie until the Main Wire is routed through the Upright.

   Tip: To prevent the Main Wire (48) from falling into the Upright (4), secure the Main Wire with the wire tie (A).

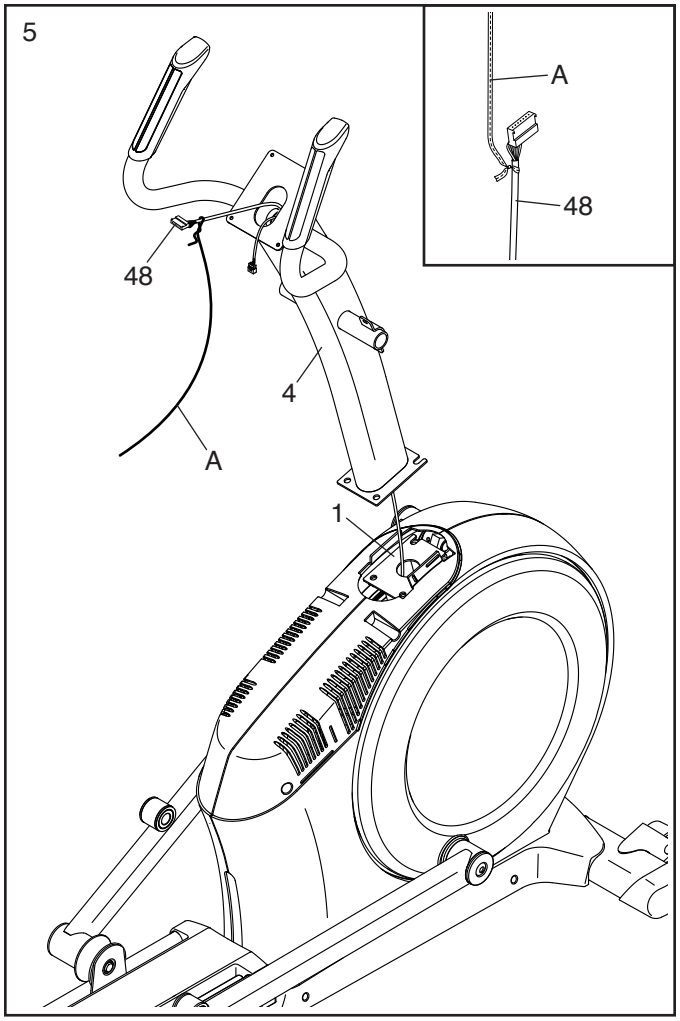

6. **Tip: Avoid pinching the Main Wire (48). Avoid damaging the indicated plastic tabs (B).** Set the Upright (4) on the Frame (1).

   Attach the Upright (4) with four M10 x 25mm Screws (92) and four M10 Split Washers (105); **start all the Screws, and then tighten them.**

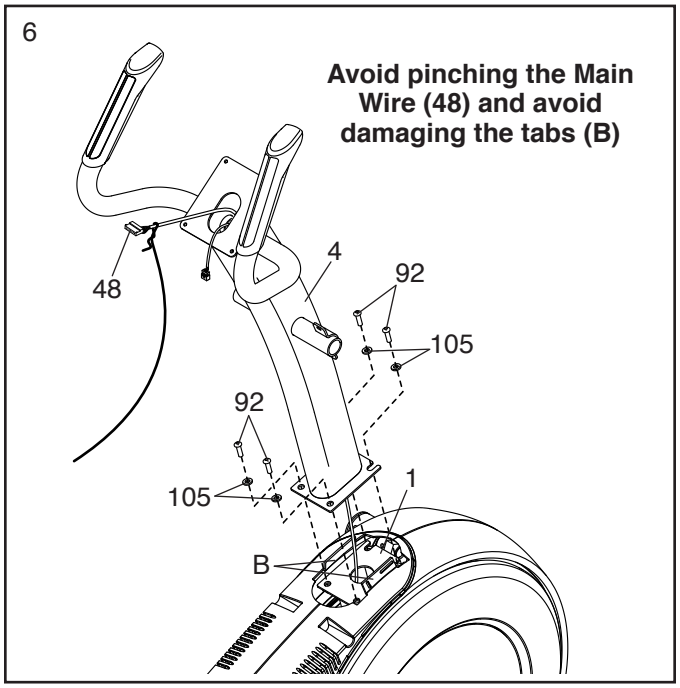

7. Using a plastic bag to keep your fingers clean, apply some of the included grease to the Pivot Axle (35).

   Insert the Pivot Axle (35) through the Upright (4) and center it. **Tip: It may be helpful to use a rubber mallet.**

   Next, slide a Pivot Spacer (54) onto the right side of the Pivot Axle (35).

   Then, identify the Right Upper Body Leg (60), orient it as shown, and slide it onto the right side of the Pivot Axle (35).

   Repeat these actions for the Left Upper Body Leg (46).

   Tighten an M8 x 13mm Screw (82) and an M8 Washer (97) into each end of the Pivot Axle (35) **at the same time.**

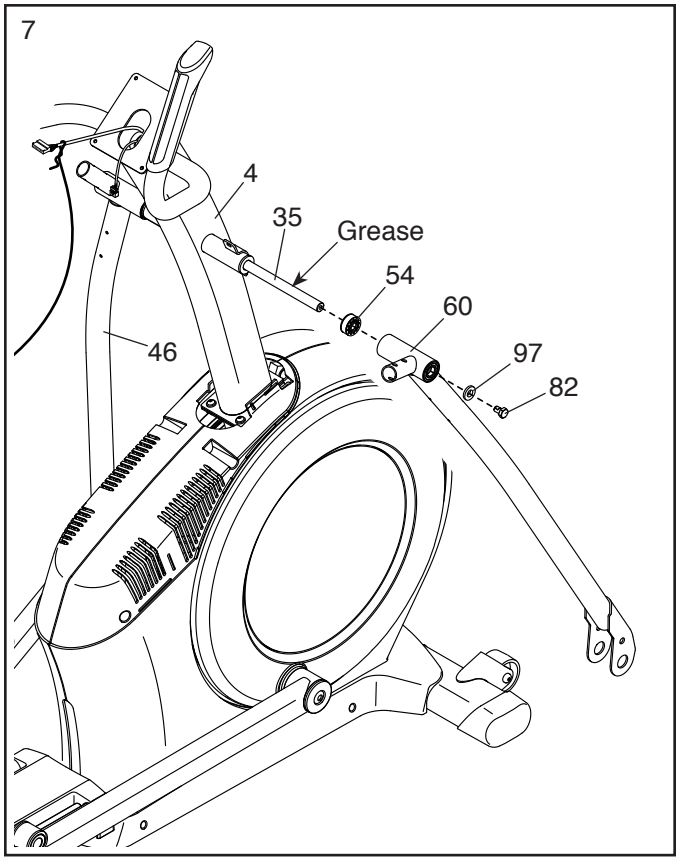

8. Identify the Right Upper Body Arm (61) and orient it as shown.

   Slide the Right Upper Body Arm (61) onto the Right Upper Body Leg (60).

   Attach the Right Upper Body Arm (61) with two M8 x 38mm Bolts (96) and two M8 Locknuts (102). **Make sure that the Locknuts are in the hexagonal holes (C).**

   Repeat this step for the Left Upper Body Arm (47).

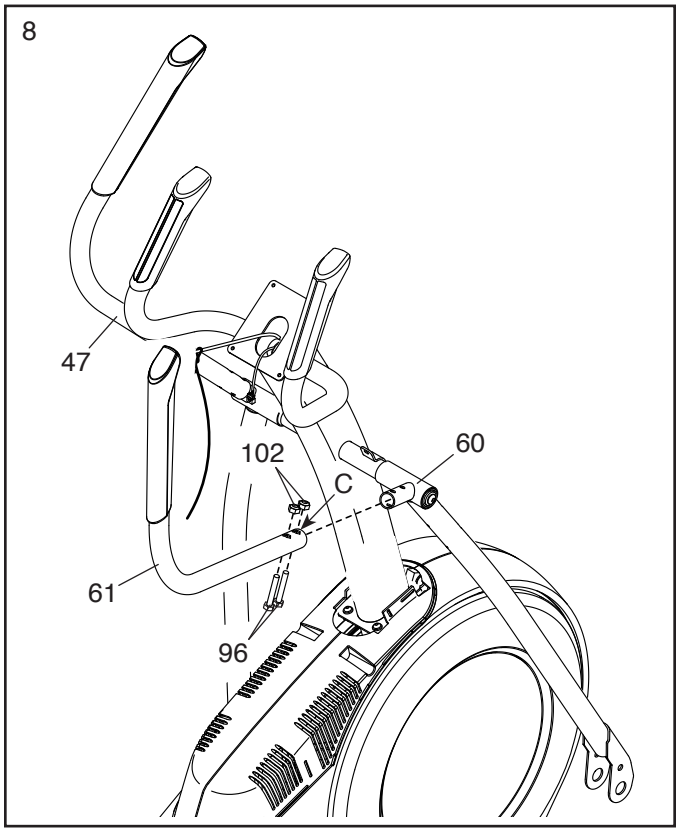

9. The Console (7) can use four D batteries (not included); alkaline batteries are recommended. Do not use old and new batteries together or alkaline, standard, and rechargeable batteries together. **IMPORTANT: If the Console has been exposed to cold temperatures, allow it to warm to room temperature before you insert batteries. Otherwise, you may damage the console displays or other electronic components.** Remove the screws (D) and the battery covers (E), insert batteries into the battery compartments, and then reattach the battery covers. **Make sure to orient the batteries as shown by the diagrams inside the battery compartments.**

   To purchase an optional power adapter, call the telephone number on the cover of this manual. To avoid damaging the Console (7), use only a manufacturer-supplied regulated power adapter. Plug one end of the power adapter into the receptacle (F) inside the indicated battery compartment, and route the power adapter through the notch (G) in the battery cover. Then, plug the other end into an outlet installed in accordance with all local codes and ordinances.

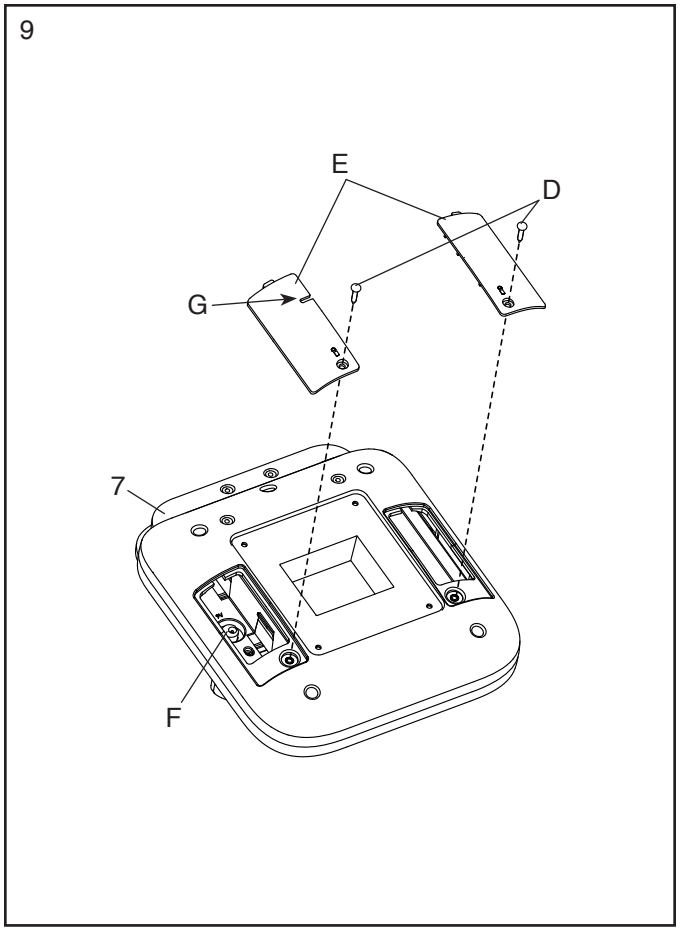

10. Untie and discard the wire tie on the Main Wire (48).

    While a second person holds the Console (7) near the Upright (4), plug the Main Wire (48) and the Pulse Wire (109) into the matching receptacles on the back of the Console.

    The connectors on the Main Wire (48) and the Pulse Wire (109) should slide easily into the receptacles and snap into place. If a connector does not slide easily into a receptacle, turn the connector and try again. **If you do not connect the connectors properly, the console may become damaged.**

    Insert the excess wire into the Upright (4) or into the Console (7).

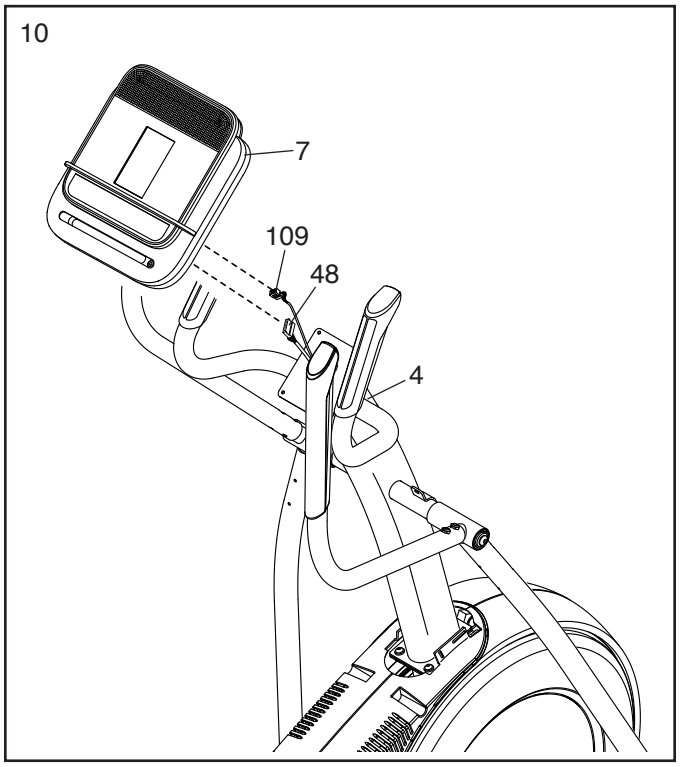

11. **Tip: Avoid pinching the wires.** Attach the Console (7) to the Upright (4) with four M4 x 16mm Screws (101); **start all the Screws, and then tighten them.**

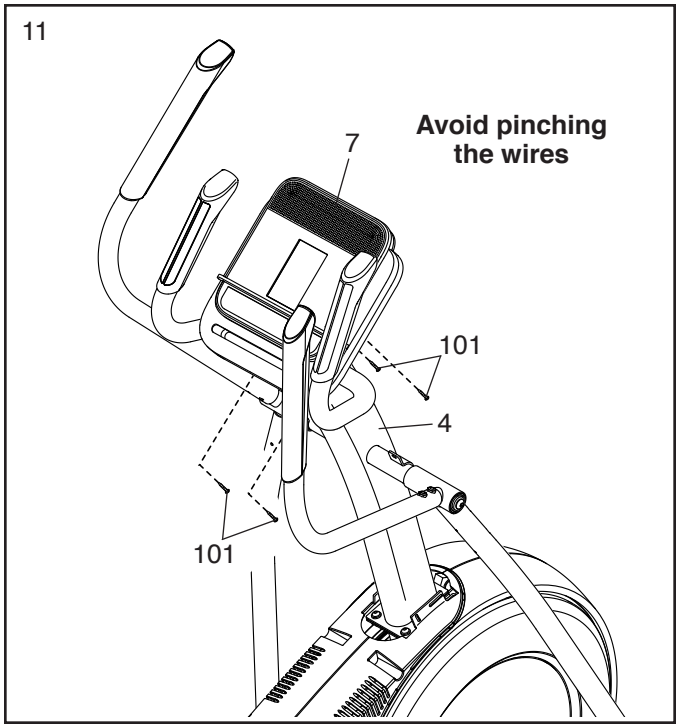

12. Orient the Right Pedal Arm (58) as shown, and then apply grease to the axle.

    Attach the Right Pedal Arm (58) to the Right Roller Arm (59) with an M8 x 20mm Screw (9) and a Center Roller Arm Cover (55); **make sure that the flat side (H) of the Center Roller Arm Cover is facing the Right Roller Arm.**

    Repeat this step for the Left Pedal Arm (44).

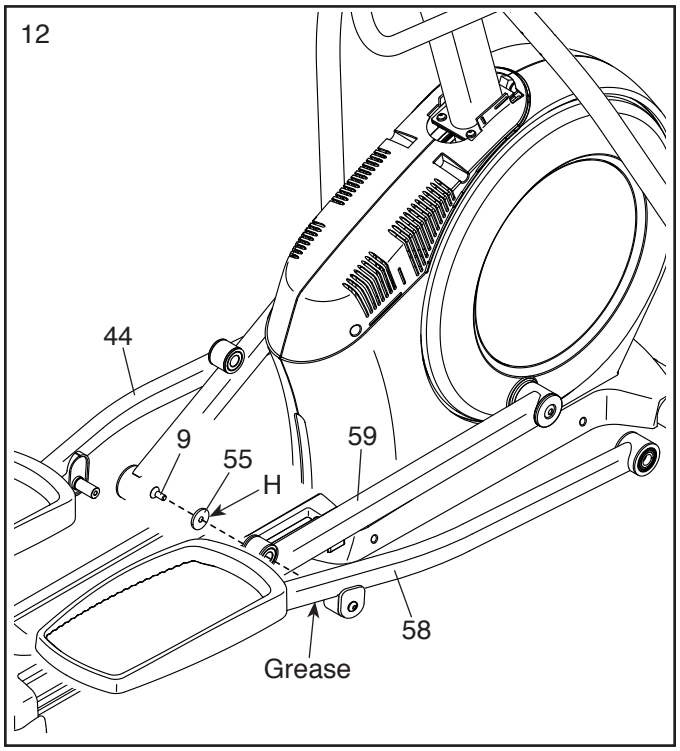

13. Apply a small amount of grease to one of the Pedal Arm Axles (64).

Next, slide an M8 x 23mm Washer (77) onto an M8 x 13mm Screw (82), and tighten the Screw a few turns into the Pedal Arm Axle (64).

While a second person holds the front end of the Right Pedal Arm (58) inside the bracket on the Right Upper Body Leg (60), insert the Pedal Arm Axle (64) into both parts.

Slide an M8 x 23mm Washer (77) onto another M8 x 13mm Screw (82), and tighten the Screw a few turns into the Pedal Arm Axle (64). **Then, tighten both Screws at the same time.**

Repeat this step on the other side of the elliptical.

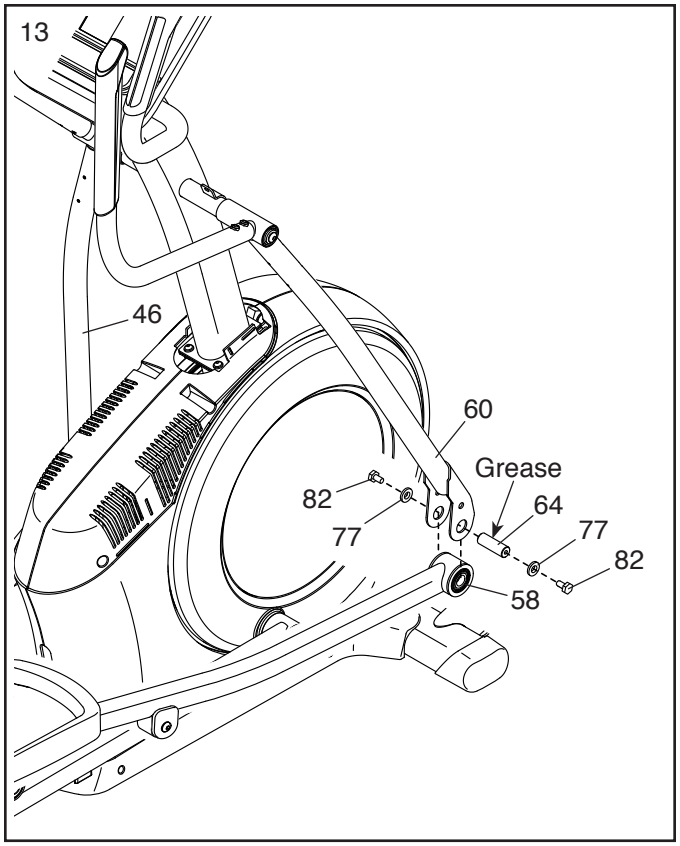

14. Orient the Rear Upright Cover (81) as shown.

Attach the Rear Upright Cover (81) to the Upright (4) with four M4 x 16mm Screws (101); **start all the Screws, and then tighten them.**

Next, orient the Front Upright Cover (12) as shown.

Attach the Front Upright Cover (12) around the Upright (4) by pressing it onto the Rear Upright Cover (81).

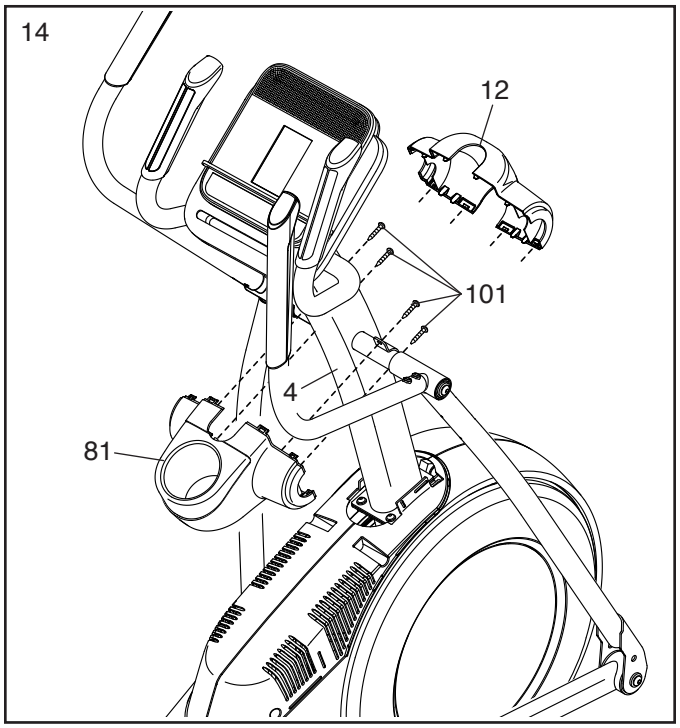

15. Identify the Right Arm Front Cover (65) and orient it as shown.

    Attach the Right Arm Front Cover (65) to the Right Upper Body Leg (60) with an M4 x 16mm Screw (101).

    Next, identify the Right Arm Rear Cover (66) and orient it as shown.

    Attach the Right Arm Rear Cover (66) around the Right Upper Body Leg (60) by pressing it onto the Right Arm Front Cover (65).

    Repeat this step on the other side of the elliptical.

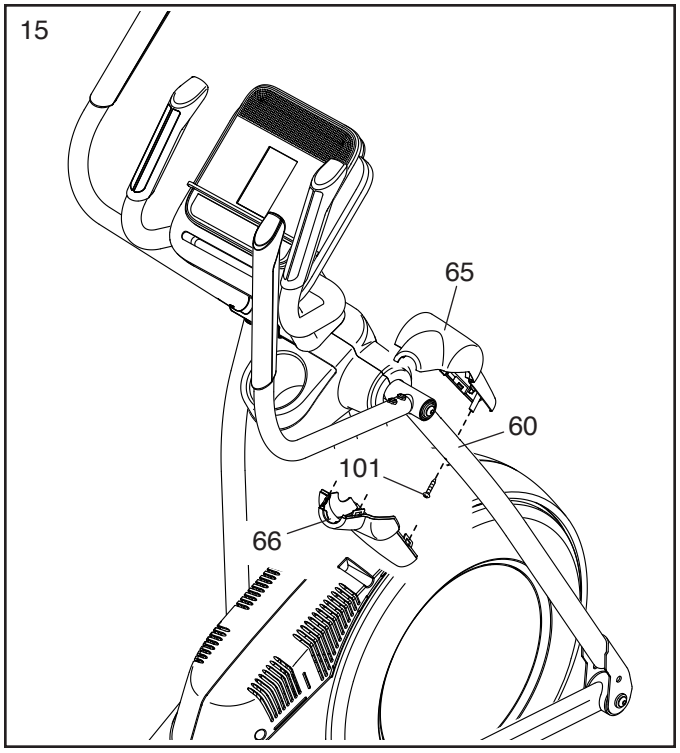

16. Identify the Right Leg Inner Cover (83) and orient it as shown.

    Attach the Right Leg Inner Cover (83) to the Right Upper Body Leg (60) with an M4 x 16mm Screw (101) and an M5 Washer (32).

    Next, identify the Right Leg Outer Cover (69) and orient it as shown.

    Attach the Right Leg Outer Cover (69) around the Right Upper Body Leg (60) by pressing it onto the Right Leg Inner Cover (83).

    Repeat this step on the other side of the elliptical.

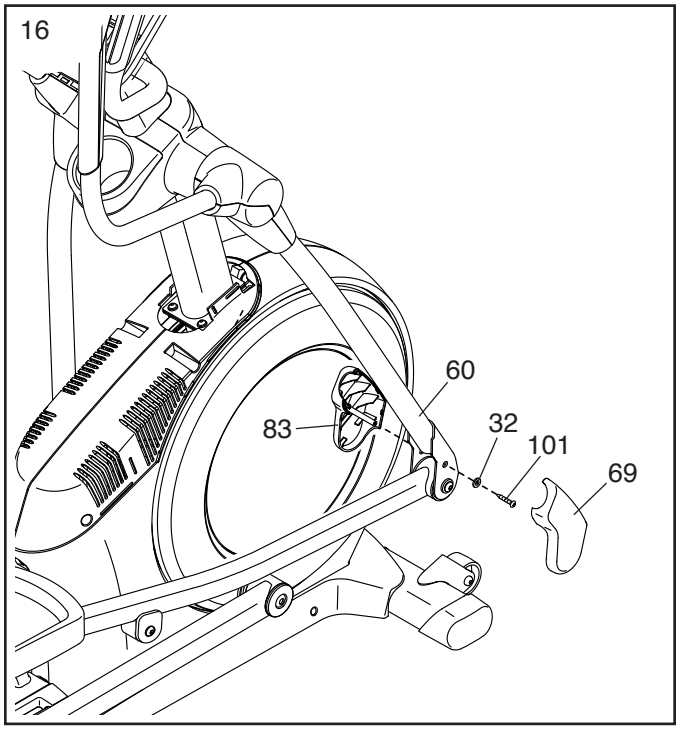

17. Orient the Shield Cover Cap (11) and the Shield Cover (75) as shown.

    First, press the Shield Cover Cap (11) into the Left and Right Shields (73, 74).

    Then, press the Shield Cover (75) into the Left and Right Shields (73, 74).

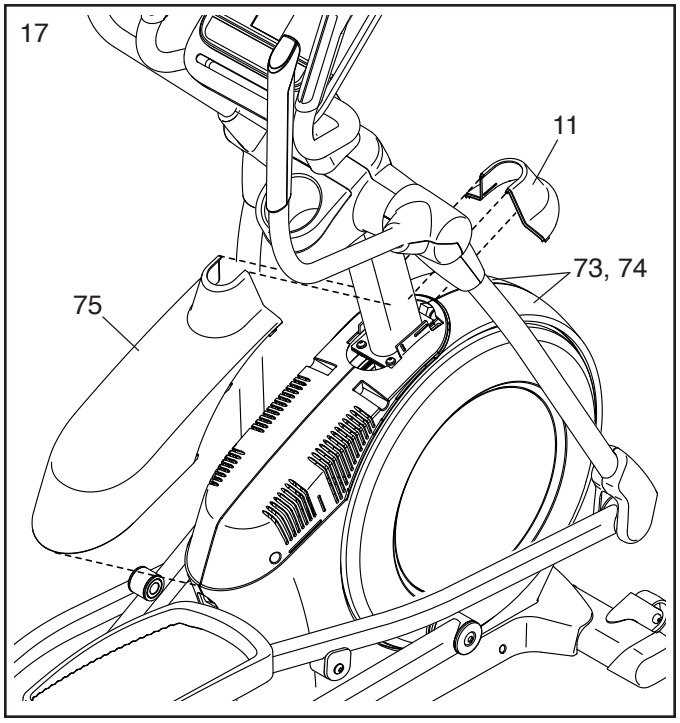

18. Attach the Tablet Holder (107) to the Console (7) with four #8 x 12mm Machine Screws (108); **start all the Machine Screws, and then tighten them.**

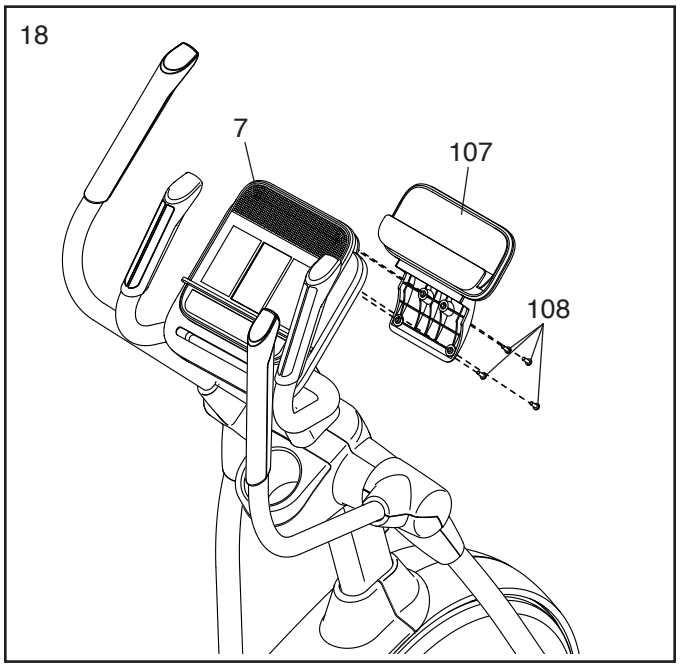

19. **Make sure that all parts are properly tightened before you use the elliptical.** Extra parts may be included. Place a mat beneath the elliptical to protect the floor.

HOW TO USE THE ELLIPTICAL

HOW TO MOVE THE ELLIPTICAL

Due to the size and weight of the elliptical, moving it requires two persons. Stand in front of the elliptical, hold the upright (A), and place one foot against one of the wheels (B). Pull on the upright and have a second person lift the handle (C) until the elliptical will roll on the wheels. Carefully move the elliptical to the desired location, and then lower it to the floor.

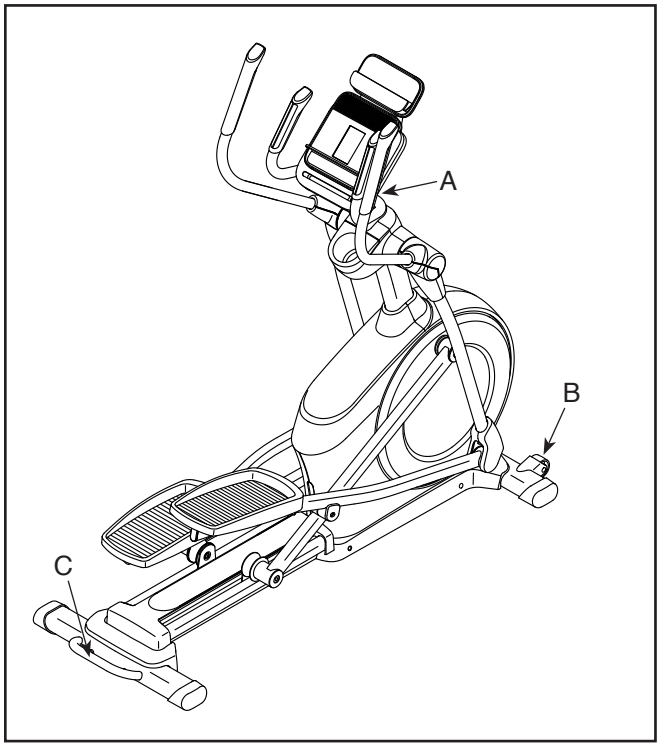

HOW TO LEVEL THE ELLIPTICAL

If the elliptical rocks slightly on your floor during use, turn one or both of the leveling feet (D) beneath the rear of the frame until the rocking motion is eliminated.

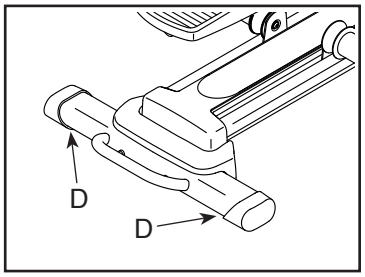

HOW TO USE THE TABLET HOLDER

IMPORTANT: The tablet holder is designed for use with most full-size tablets. Do not place any other electronic device or object into the tablet holder.

To insert a tablet into the tablet holder (E), set the bottom edge of the tablet in the tray. **Make sure that the tablet is firmly secured in the tablet holder.** Reverse these actions to remove the tablet from the tablet holder.

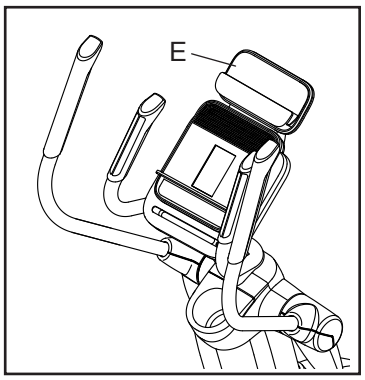

HOW TO EXERCISE ON THE ELLIPTICAL

To mount the elliptical, hold the handlebars (F) or the upper body arms (G) and step onto the pedal (H) that is in the lower position. Then, step onto the other pedal. Push the pedals until they begin to move with a continuous motion. **Note: The pedals can turn in either direction. It is recommended that you turn the pedals in the direction shown by the arrow; however, for variety, you can turn the pedals in the opposite direction.**

To dismount the elliptical, wait until the pedals (H) come to a complete stop. **Note: The elliptical does not have a free wheel; the pedals will continue to move until the flywheel stops.** When the pedals are stationary, step off the higher pedal first. Then, step off the lower pedal.

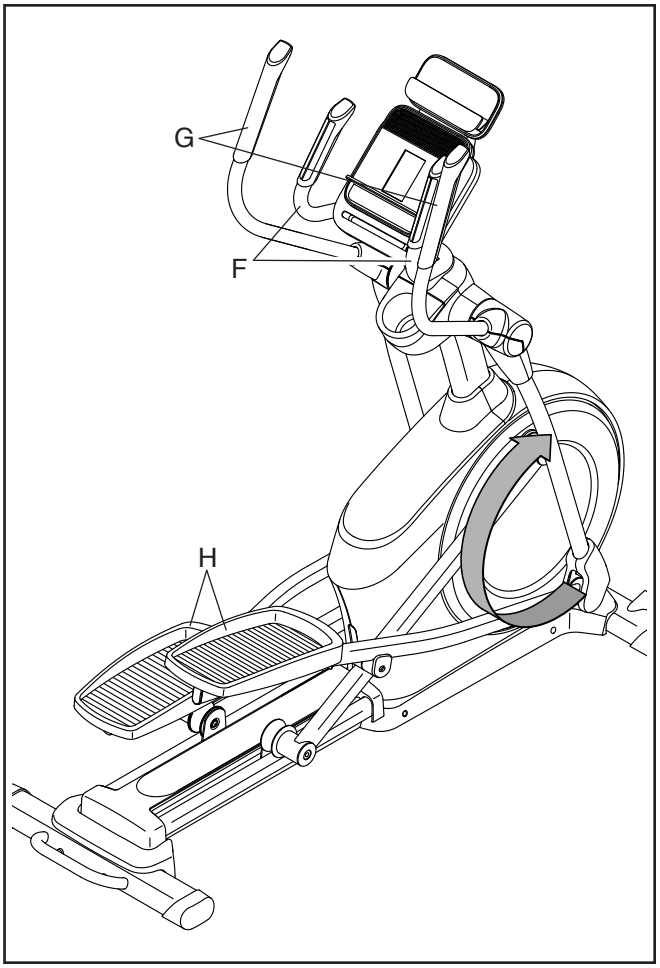

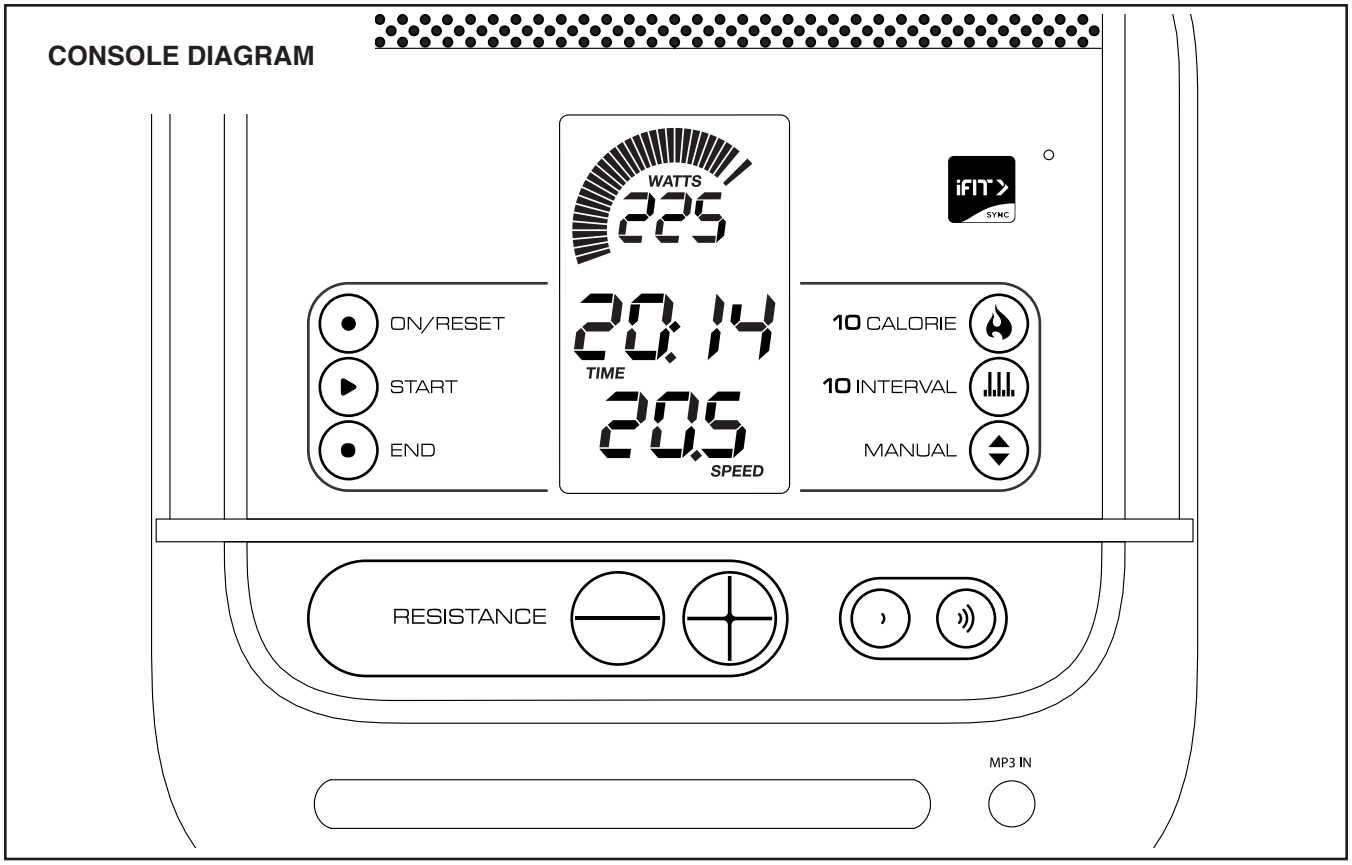

FEATURES OF THE CONSOLE

The advanced console offers an array of features designed to make your workouts more effective and enjoyable.

When you use the manual mode of the console, you can change the resistance of the pedals with the touch of a button. As you exercise, the console will provide continuous exercise feedback. You can even measure your heart rate using the handgrip heart rate monitor or a compatible heart rate monitor. **See page 21 for information about purchasing an optional chest heart rate monitor.**

You can also connect your tablet to the console and use the iFit® Bluetooth Tablet app to record and track your workout information.

The console also offers a selection of preset workouts. Each preset workout automatically changes the resistance of the pedals and prompts you to maintain a target speed as it guides you through an effective workout.

You can even connect your personal audio player to the console sound system and listen to your favorite music or audio books while you exercise.

To use the manual mode, see page 18. **To use a preset workout,** see page 20. **To use the sound system,** see page 21. **To connect your tablet to the console,** see page 21. **To connect your heart rate monitor to the console,** see page 22. **To use the settings mode,** see page 22.

Note: Before using the console, make sure that batteries are installed (see assembly step 9 on page 10). If there is a sheet of plastic on the display, remove the plastic.

HOW TO USE THE MANUAL MODE

1. **Turn on the console.**

   Press any button or begin pedaling to turn on the console.

   When you turn on the console, the displays will turn on, a tone will sound, and the console will be ready for use.

2. **Select the manual mode.**

   When you turn on the console, the manual mode will be selected automatically.

   If you have selected a workout, reselect the manual mode by pressing the Manual button.

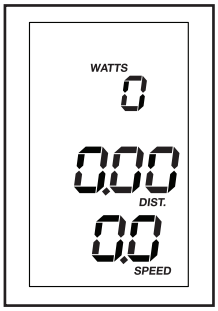

3. **Begin pedaling and change the resistance of the pedals as desired.**

   Press the Start button and begin pedaling. As you pedal, change the resistance of the pedals by pressing the Resistance increase and decrease buttons.

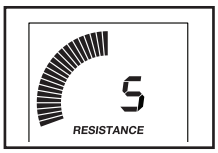

   Note: After you press the buttons, it will take a moment for the pedals to reach the selected resistance level.

4. **Follow your progress with the displays.**

   The speed meter—This display will provide a visual representation of your pedaling speed. As you increase or decrease your pedaling speed, bars will appear or disappear in the speed meter.

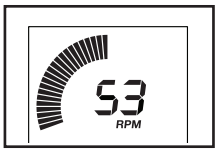

   Note: During a preset workout, this display will show a target speed zone for each segment of the workout.

   The upper display—This display will show your pedaling speed in revolutions per minute (RPM) and your power output in watts. The display will change every few seconds.

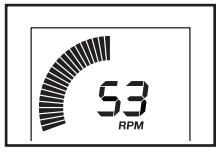

   This display will also show the resistance level of the pedals for a few seconds each time the resistance level changes.

   This display will also show your heart rate (BPM) when you use the handgrip heart rate monitor or a compatible heart rate monitor (see step 5).

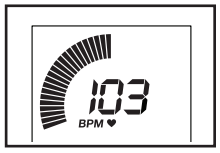

   The center display—This display will show the distance (Dist.) you have pedaled in miles or kilometers and the elapsed time. The display will change every few seconds.

   Note: During a preset workout, the display will show the time remaining in the workout instead of the elapsed time.

   The lower display—This display will show your pedaling speed in miles per hour or kilometers per hour and the approximate number of calories (Cals.) you have burned. The display will change every few seconds.

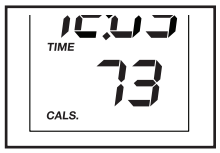

   Change the volume level of the console by pressing the volume increase and decrease buttons.

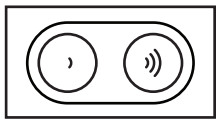

To pause the console, stop pedaling. When the console is paused, the displays will pause. To continue your workout, simply resume pedaling.

To end your workout, press the End button. To reset the displays to zero, press the On/Reset button.

Note: The console can show pedaling speed and distance in either miles or kilometers. To change the unit of measurement, see THE SETTINGS MODE on page 22.

5. **Measure your heart rate if desired.**

   You can measure your heart rate using either the handgrip heart rate monitor or a compatible heart rate monitor. For information about purchasing an optional chest heart rate monitor, see page 10.

   The console is compatible with all BLUETOOTH® Smart heart rate monitors. To connect your heart rate monitor to the console, see page 22.

   Note: If you use both heart rate monitors at the same time, the BLUETOOTH Smart heart rate monitor will have priority.

   If there are sheets of plastic on the metal contacts (A) on the handgrip heart rate monitor, remove the plastic. In addition, make sure that your hands are clean. To measure your heart rate, hold the handgrip heart rate monitor with your palms resting against the contacts. **Avoid moving your hands or gripping the contacts tightly.**

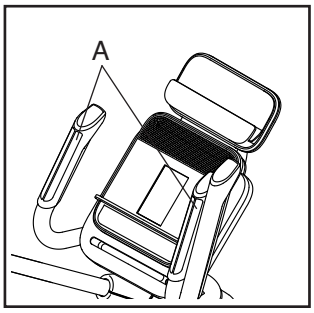

   When your pulse is detected, your heart rate will be shown in the upper display. **For the most accurate heart rate reading, hold the contacts for at least 15 seconds.**

   If your heart rate is not shown, make sure that your hands are positioned as described. Be careful not to move your hands excessively or to squeeze the contacts tightly. For optimal performance, clean the contacts using a soft cloth; **never use alcohol, abrasives, or chemicals to clean the contacts.**

6. **When you are finished exercising, the console will turn off automatically.**

   If the pedals do not move for several seconds, a series of tones will sound, the console will pause, and displays will pause.

   If the pedals do not move for several minutes, the console will turn off and the displays will be reset.

HOW TO USE A PRESET WORKOUT

1. **Turn on the console.**

   Press any button or begin pedaling to turn on the console.

   When you turn on the console, the displays will turn on, a tone will sound, and the console will be ready for use.

2. **Select a preset workout.**

   To select a preset workout, press the Calorie or Interval button repeatedly until the number of the desired workout appears in the lower display.

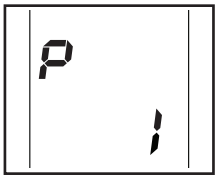

3. **Start the workout.**

   Press the Start button or begin pedaling to start the workout.

   Each workout is divided into one-minute segments. One resistance level and one target speed are programmed for each segment. Note: The same resistance level and/or target speed may be programmed for consecutive segments.

   At the end of each segment of the workout, a series of tones will sound. The resistance level for the next segment will appear in the upper display for a few seconds to alert you. The resistance of the pedals will then change.

   The speed meter will show two flashing bars that represent the target speed zone (B) for the segment; the target speed zone includes a range of speeds that are within a few RPMs of the target speed for the segment. The solid bars represent your actual pedaling speed.

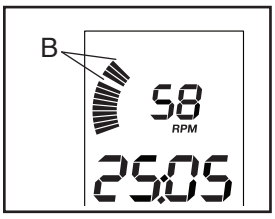

   As you exercise, keep your pedaling speed within the target zone for the current segment by increasing or decreasing your pedaling speed or by increasing or decreasing the resistance of the pedals.

   IMPORTANT: The target speed is intended only to provide motivation. Make sure to pedal at a speed and a resistance level that is comfortable for you.

   If the resistance level for the current segment is too high or too low, you can manually override the setting by pressing the Resistance buttons. **IMPORTANT: When the current segment of the workout ends, the pedals will automatically adjust to the resistance level programmed for the next segment.**

   If you stop pedaling for several seconds, a series of tones will sound and the workout will pause.

   To restart the workout, simply resume pedaling. The workout will continue until the last segment of the workout ends. To end the workout manually at any time, press the End button.

4. **Follow your progress with the displays.**

   See step 4 on page 18.

5. **Measure your heart rate if desired.**

   See step 5 on page 19.

6. **When you are finished exercising, the console will turn off automatically.**

   See step 6 on page 19.

HOW TO USE THE SOUND SYSTEM

To play music or audio books through the console sound system while you exercise, plug a 3.5 mm male to 3.5 mm male audio cable (not included) into the jack on the console and into a jack on your personal audio player; **make sure that the audio cable is fully plugged in. Note: To purchase an audio cable, see your local electronics store.**

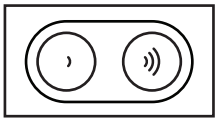

Next, press the play button on your personal audio player. Adjust the volume level using the volume increase and decrease buttons on the console or the volume control on your personal audio player.

THE OPTIONAL CHEST HEART RATE MONITOR

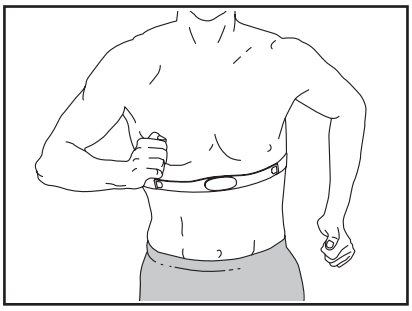

Whether your goal is to burn fat or to strengthen your cardiovascular system, the key to achieving the best results is to maintain the proper heart rate during your workouts. The optional chest heart rate monitor will enable you to continuously monitor your heart rate while you exercise, helping you to reach your personal fitness goals. **To purchase a chest heart rate monitor, please see the front cover of this manual.**

Note: The console is compatible with all BLUETOOTH Smart heart rate monitors.

HOW TO CONNECT YOUR TABLET TO THE CONSOLE

The console supports BLUETOOTH connections to tablets via the iFit Bluetooth Tablet app and to compatible heart rate monitors. Note: Other BLUETOOTH connections are not supported.

1. **Download and install the iFit Bluetooth Tablet app on your tablet.**

   On your iOS® or Android™ tablet, open the App Store℠ or the Google Play™ store, search for the free iFit Bluetooth Tablet app, and then install the app on your tablet. **Make sure that the BLUETOOTH option is enabled on your tablet.**

   Then, open the iFit Bluetooth Tablet app and follow the instructions to set up an iFit account and customize settings.

2. **Connect your heart rate monitor to the console if desired.**

   If you are connecting both your heart rate monitor and your tablet to the console, **you must connect your heart rate monitor before you connect your tablet.** See HOW TO CONNECT YOUR HEART RATE MONITOR TO THE CONSOLE page 22.

3. **Connect your tablet to the console.**

   Press the iFit Sync button on the console; the console pairing number will appear in the display. Then, follow the instructions in the iFit Bluetooth Tablet app to connect your tablet to the console.

   When a connection is established, the LED on the console will turn solid blue.

4. **Record and track your workout information.**

   Follow the instructions in the iFit Bluetooth Tablet app to record and track your workout information.

5. **Disconnect your tablet from the console if desired.**

   To disconnect your tablet from the console, first select the disconnect option in the iFit Bluetooth Tablet app. Then, press and hold the iFit Sync button on the console until the LED on the console turns solid green.

   Note: All BLUETOOTH connections between the console and other devices (including any tablets, heart rate monitors, and so forth) will be disconnected.

HOW TO CONNECT YOUR HEART RATE MONITOR TO THE CONSOLE

The console is compatible with all BLUETOOTH Smart heart rate monitors.

To connect your BLUETOOTH Smart heart rate monitor to the console, press the iFit Sync button on the console; the console pairing number will appear in the display. When a connection is established, the LED on the console will flash red twice.

Note: If there is more than one compatible heart rate monitor near the console, the console will connect to the heart rate monitor with the strongest signal.

To disconnect your heart rate monitor from the console, press and hold the iFit Sync button on the console until the LED on the console turns solid green.

Note: All BLUETOOTH connections between the console and other devices (including any tablets, heart rate monitors, and so forth) will be disconnected.

THE SETTINGS MODE

The console features a settings mode that allows you to select a unit of measurement for the console and to view console usage information.

To select the settings mode, press and hold down the On/Reset button until the settings mode information appears in the display.

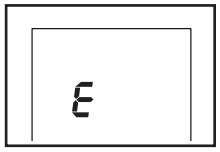

The console can show pedaling speed and distance in either miles or kilometers. The upper display will show the selected unit of measurement. An E for English miles or an M for metric kilometers will appear in the display. To change the unit of measurement, press the Interval button repeatedly.

Note: When you replace the batteries, it may be necessary to reselect the unit of measurement.

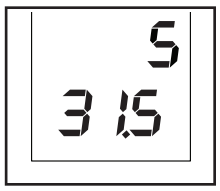

Press the Calorie button to view the total distance and the total time. The center display will show the total time (in hours) that the console has been used since the elliptical was purchased. The lower display will show the total distance (in miles or kilometers) that the elliptical has been pedaled.

To exit the settings mode, press the Calorie button repeatedly.

MAINTENANCE AND TROUBLESHOOTING

MAINTENANCE

Regular maintenance is important for optimal performance and to reduce wear. Inspect and properly tighten all parts each time the elliptical is used. Replace any worn parts immediately.

To clean the elliptical, use a damp cloth and a small amount of mild soap. **IMPORTANT: To avoid damage to the console, keep liquids away from the console and keep the console out of direct sunlight.**

CONSOLE TROUBLESHOOTING

Most console problems are the result of low batteries. To replace the batteries, see assembly step 9 on page 10.

If the console does not display your heart rate when you hold the handgrip heart rate monitor, or if the displayed heart rate appears to be too high or too low, see step 5 on page 19.

HOW TO LEVEL THE ELLIPTICAL

If the elliptical rocks slightly on your floor during use, see HOW TO LEVEL THE ELLIPTICAL on page 15.

HOW TO ADJUST THE REED SWITCH

If the console does not display correct feedback, the reed switch should be adjusted.

To adjust the drive belt, first use a standard screwdriver to pry off the left Disc (71).

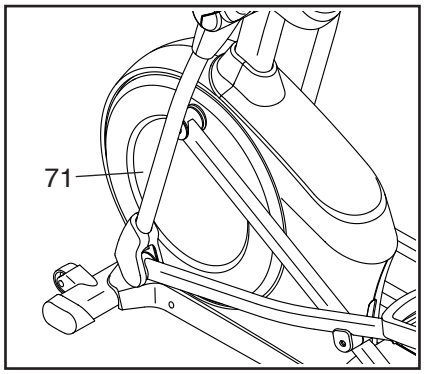

Note: For clarity, the left shield is shown removed in the drawing below.

Next, locate the Reed Switch (38). Turn the Pulley (19) until a Magnet (43) is aligned with the Reed Switch.

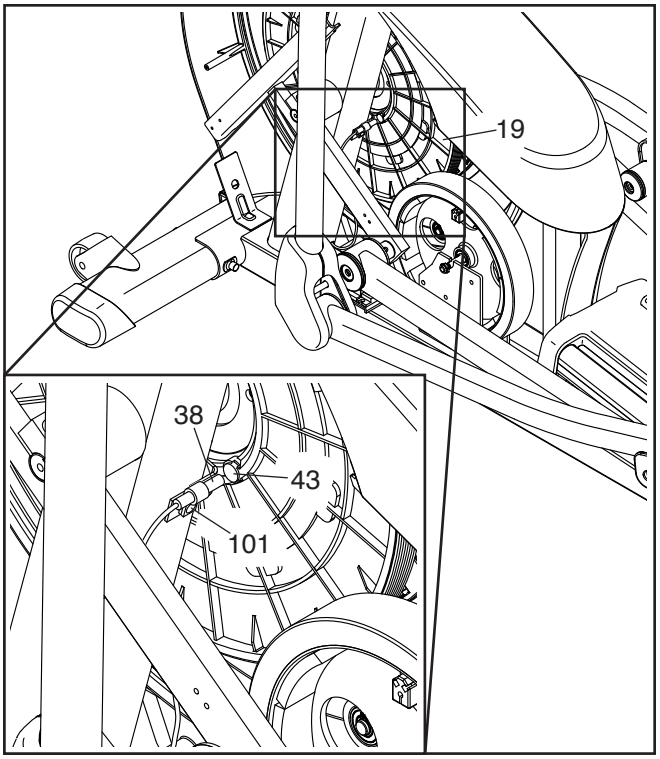

Slightly loosen the indicated M4 x 16mm Screw (101). Slide the Reed Switch (38) slightly closer to or away from the Magnet (43), and then retighten the Screw.

Then, rock the Pulley (19) forward and backward just enough that the Magnet (43) passes the Reed Switch (38) repeatedly. Repeat these actions until the console displays correct feedback.

When the reed switch is correctly adjusted, reattach the left disc.

HOW TO ADJUST THE DRIVE BELT

If the pedals slip while you are pedaling, even while the resistance is adjusted to the highest level, the drive belt may need to be adjusted.

To adjust the drive belt, first **see assembly step 17 on page 14.** Use a standard screwdriver to pry off the Shield Cover (75) and the Shield Cover Cap (11).

See assembly step 16 on page 13. Remove the Right Upper Body Leg Outer and Inner Covers (69, 83).

See assembly step 13 on page 12. Remove the Right Pedal Arm (58) from the Right Upper Body Leg (60).

Next, remove the M8 x 16mm Screw (95), the Upper Roller Arm Cover (79), and the M8 Washer (not shown) from the right Crank Arm (20). Then, carefully remove the Right Roller Arm (59) and the Right Pedal Arm (58) from the elliptical.

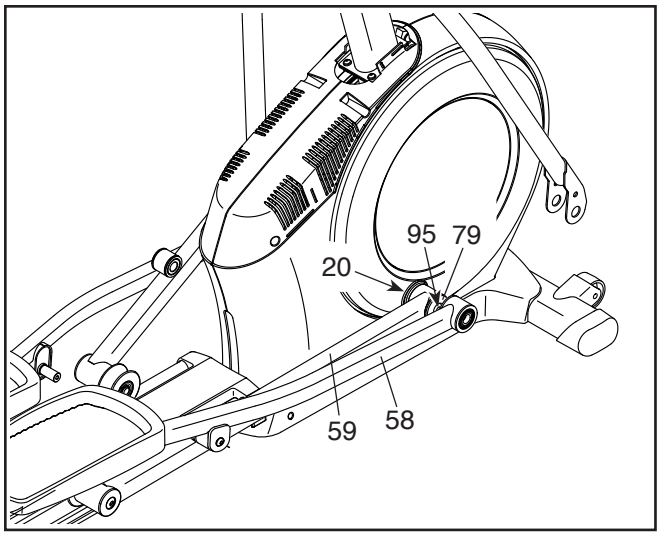

See EXPLODED DRAWING C on page 31. Identify the Left and Right Shields (73, 74). Remove the M4 x 19mm Screws (5) and the M4 x 48mm Screw (31) from the Left and Right Shields; **make sure to note the location of each size of screw.** Then, remove the Right Shield.

Next, locate and loosen the Idler Screw (89). Next, tighten the Belt Adjustment Screw (91) until the Drive Belt (17) is tight. Then, retighten the Idler Screw.

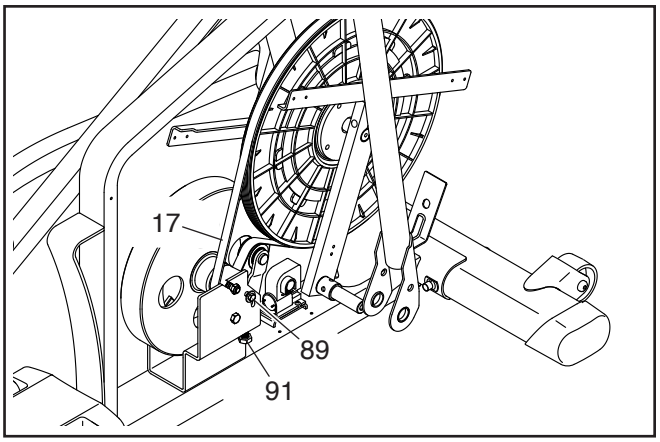

Then, reattach the parts that you removed.

EXERCISE GUIDELINES

⚠ WARNING: Before beginning this or any exercise program, consult your physician. This is especially important for persons over age 35 or persons with pre-existing health problems.

The heart rate monitor is not a medical device. Various factors may affect the accuracy of heart rate readings. The heart rate monitor is intended only as an exercise aid in determining heart rate trends in general.

These guidelines will help you to plan your exercise program. For detailed exercise information, obtain a reputable book or consult your physician. Remember, proper nutrition and adequate rest are essential for successful results.

EXERCISE INTENSITY

Whether your goal is to burn fat or to strengthen your cardiovascular system, exercising at the proper intensity is the key to achieving results. You can use your heart rate as a guide to find the proper intensity level. The chart below shows recommended heart rates for fat burning and aerobic exercise.

165	*155*	*145*	*140*	*130*	*125*	*115*	💗
145	*138*	*130*	*125*	*118*	*110*	*103*	💗
125	*120*	*115*	*110*	*105*	*95*	*90*	♥
20	*30*	*40*	*50*	*60*	*70*	*80*	

To find the proper intensity level, find your age at the bottom of the chart (ages are rounded off to the nearest ten years). The three numbers listed above your age define your "training zone." The lowest number is the heart rate for fat burning, the middle number is the heart rate for maximum fat burning, and the highest number is the heart rate for aerobic exercise.

Burning Fat—To burn fat effectively, you must exercise at a low intensity level for a sustained period of time. During the first few minutes of exercise, your body uses carbohydrate calories for energy. Only after the first few minutes of exercise does your body begin to use stored fat calories for energy. If your goal is to burn fat, adjust the intensity of your exercise until your heart rate is near the lowest number in your training zone. For maximum fat burning, exercise with your heart rate near the middle number in your training zone.

Aerobic Exercise—If your goal is to strengthen your cardiovascular system, you must perform aerobic exercise, which is activity that requires large amounts of oxygen for prolonged periods of time. For aerobic exercise, adjust the intensity of your exercise until your heart rate is near the highest number in your training zone.

WORKOUT GUIDELINES

Warming Up—Start with 5 to 10 minutes of stretching and light exercise. A warm-up increases your body temperature, heart rate, and circulation in preparation for exercise.

Training Zone Exercise—Exercise for 20 to 30 minutes with your heart rate in your training zone. (During the first few weeks of your exercise program, do not keep your heart rate in your training zone for longer than 20 minutes.) Breathe regularly and deeply as you exercise; never hold your breath.

Cooling Down—Finish with 5 to 10 minutes of stretching. Stretching increases the flexibility of your muscles and helps to prevent post-exercise problems.

EXERCISE FREQUENCY

To maintain or improve your condition, complete three workouts each week, with at least one day of rest between workouts. After a few months of regular exercise, you may complete up to five workouts each week, if desired. Remember, the key to success is to make exercise a regular and enjoyable part of your everyday life.

SUGGESTED STRETCHES

The correct form for several basic stretches is shown at the right. Move slowly as you stretch; never bounce.

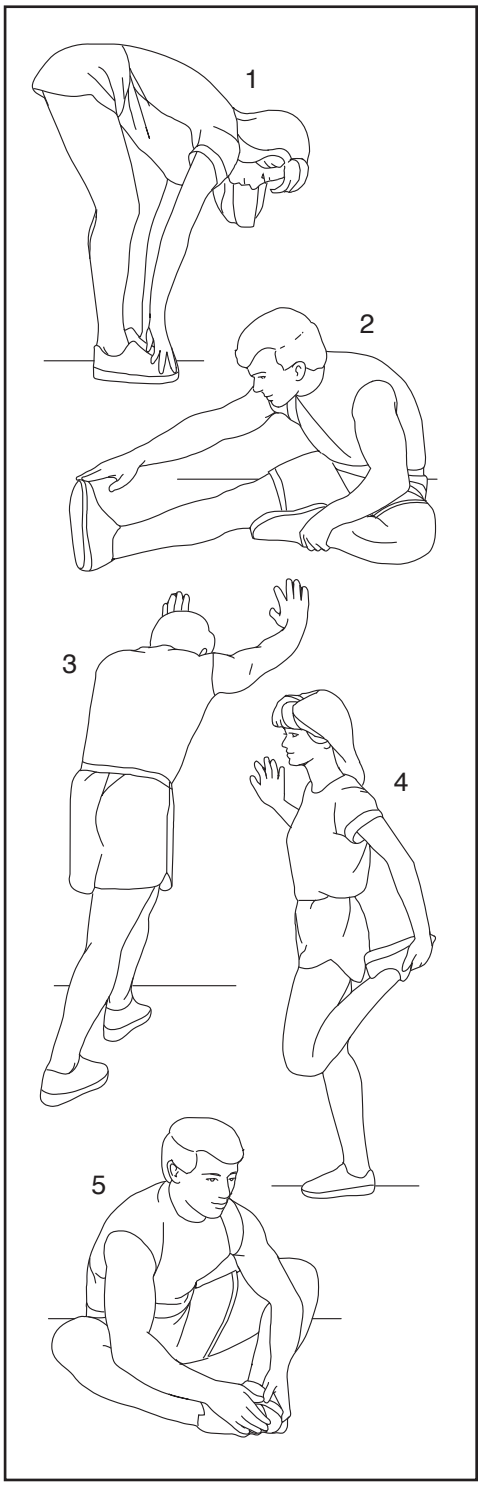

1. Toe Touch Stretch

Stand with your knees bent slightly and slowly bend forward from your hips. Allow your back and shoulders to relax as you reach down toward your toes as far as possible. Hold for 15 counts, then relax. Repeat 3 times. Stretches: Hamstrings, back of knees and back.

2. Hamstring Stretch

Sit with one leg extended. Bring the sole of the opposite foot toward you and rest it against the inner thigh of your extended leg. Reach toward your toes as far as possible. Hold for 15 counts, then relax. Repeat 3 times for each leg. Stretches: Hamstrings, lower back and groin.

3. Calf/Achilles Stretch

With one leg in front of the other, reach forward and place your hands against a wall. Keep your back leg straight and your back foot flat on the floor. Bend your front leg, lean forward and move your hips toward the wall. Hold for 15 counts, then relax. Repeat 3 times for each leg. To cause further stretching of the achilles tendons, bend your back leg as well. Stretches: Calves, achilles tendons and ankles.

4. Quadriceps Stretch

With one hand against a wall for balance, reach back and grasp one foot with your other hand. Bring your heel as close to your buttocks as possible. Hold for 15 counts, then relax. Repeat 3 times for each leg. Stretches: Quadriceps and hip muscles.

5. Inner Thigh Stretch

Sit with the soles of your feet together and your knees outward. Pull your feet toward your groin area as far as possible. Hold for 15 counts, then relax. Repeat 3 times. Stretches: Quadriceps and hip muscles.

PART LIST

Model No. PFEVEL49717.1 R0717A

Key No.	Qty.	Description
1	1	Frame
2	1	Rear Stabilizer
3	2	M10 Flange Nut
4	1	Upright
5	8	M4 x 19mm Screw
6	1	Front Stabilizer
7	1	Console
8	2	Roller Guide
9	2	M8 x 20mm Screw
10	1	Track Cover
11	1	Shield Cover Cap
12	1	Front Upright Cover
13	2	Disc Ring
14	4	M4 x 40mm Screw
15	1	Rear Stabilizer Cover
16	2	Track
17	1	Drive Belt
18	1	Crank
19	1	Pulley
20	2	Crank Arm
21	4	M4 x 10mm Screw
22	1	Idler
23	2	Bumper
24	1	Small Leveling Foot
25	1	Resistance Motor
26	4	M10 Locknut
27	2	M4 x 19mm Self-tapping Screw
28	1	Eddy Mechanism
29	1	Mechanism Axle
30	4	Stabilizer Cap
31	3	M4 x 48mm Screw
32	2	M5 Washer
33	2	Leveling Foot
34	2	Wheel
35	1	Pivot Axle
36	2	Upright Bushing
37	1	Accessory Tray
38	1	Reed Switch/Wire
39	1	Reed Switch Clamp
40	2	Frame Bearing
41	1	Snap Ring
42	1	Sleeve
43	2	Magnet
44	1	Left Pedal Arm
45	1	Left Roller Arm
46	1	Left Upper Body Leg
47	1	Left Upper Body Arm
48	1	Main Wire
49	2	Pedal
50	2	Small Arm Bearing
51	2	Roller
52	2	Pedal Arm Rear Cap
53	2	Lower Roller Arm Cover
54	2	Pivot Spacer
55	2	Center Roller Arm Cover
56	4	Roller Arm Bushing
57	6	Large Arm Bearing
58	1	Right Pedal Arm
59	1	Right Roller Arm
60	1	Right Upper Body Leg
61	1	Right Upper Body Arm
62	2	Grip
63	2	Pulse Sensor
64	2	Pedal Arm Axle
65	1	Right Arm Front Cover
66	1	Right Arm Rear Cover
67	1	Left Arm Front Cover
68	1	Left Arm Rear Cover
69	1	Right Leg Outer Cover
70	1	Left Leg Outer Cover
71	2	Disc
72	1	Left Leg Inner Cover
73	1	Left Shield
74	1	Right Shield
75	1	Shield Cover
76	1	Left Pedal Arm Side Cap
77	4	M8 x 23mm Washer
78	2	Key
79	2	Upper Roller Arm Cover
80	2	Bearing Spacer
81	1	Rear Upright Cover
82	10	M8 x 13mm Screw
83	1	Right Leg Inner Cover
84	2	M10 x 60mm Bolt
85	2	M4 x 14mm Screw
86	2	M10 x 58mm Bolt
87	1	Right Pedal Arm Side Cap
88	1	Idler Pivot Screw
89	1	Idler Screw
90	2	M6 Washer
91	1	Belt Adjustment Screw
92	4	M10 x 25mm Screw
93	4	#8 x 12mm Screw
94	2	M6 x 13mm Screw
95	8	M8 x 16mm Screw
96	4	M8 x 38mm Bolt
97	2	M8 Washer
98	2	M8 x 18mm Washer
99	1	Plastic Spacer
100	4	Leg Bearing

Key No.	Qty.	Description	Key No.	Qty.	Description
101	27	M4 x 16mm Screw	107	1	Tablet Holder
102	4	M8 Locknut	108	4	#8 x 12mm Machine Screw
103	8	M6 x 12mm Screw	109	1	Pulse Wire
104	4	M10 x 122mm Screw	*	–	Assembly Tool
105	8	M10 Split Washer	*	–	Grease Packet
106	3	Cover Mount	*	–	User's Manual

Note: Specifications are subject to change without notice. For information about ordering replacement parts, see the back cover of this manual. *These parts are not illustrated.

EXPLODED DRAWING A

Model No. PFEVEL49717.1 R0717A

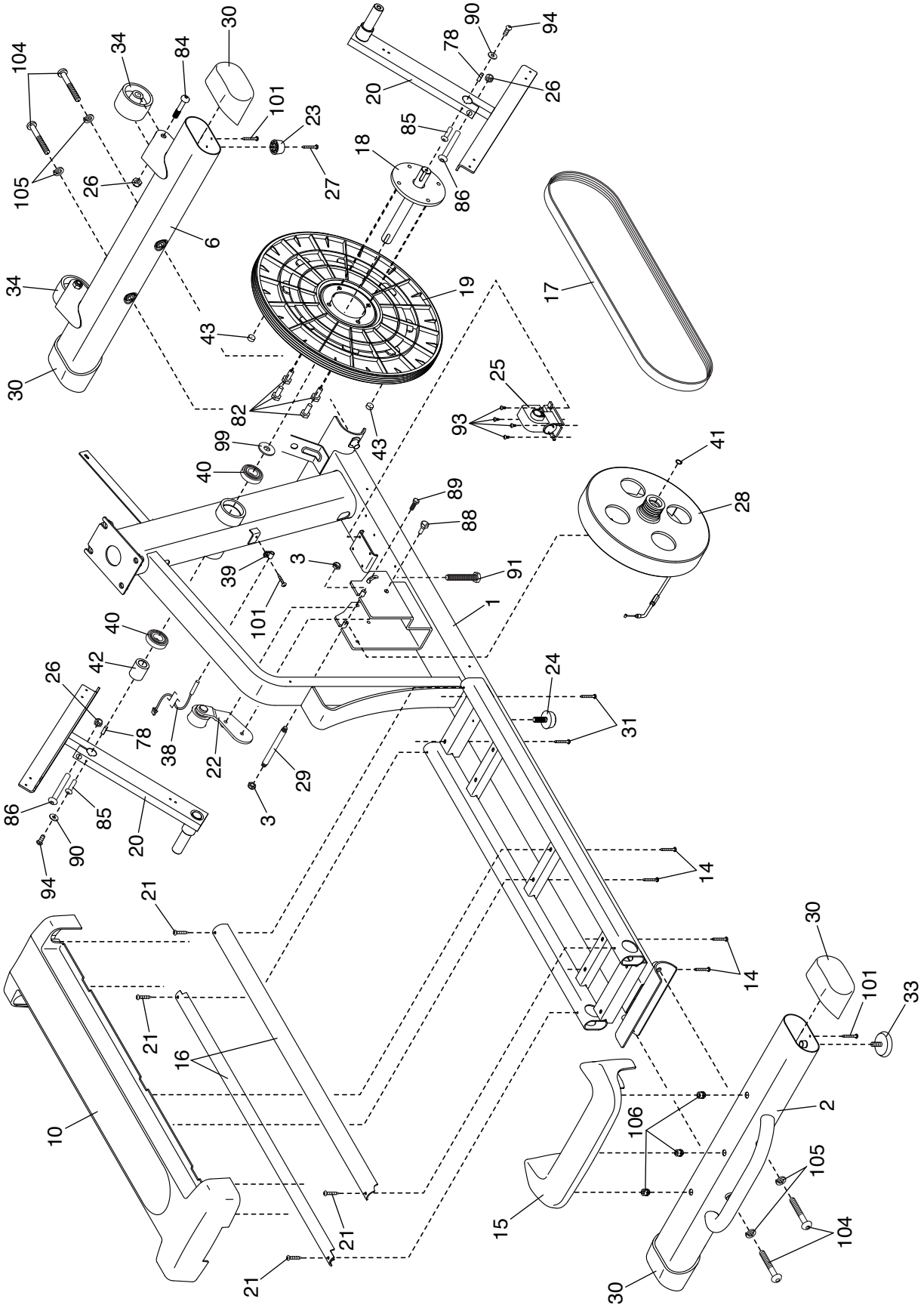

EXPLODED DRAWING B

Model No. PFEVEL49717.1 R0717A

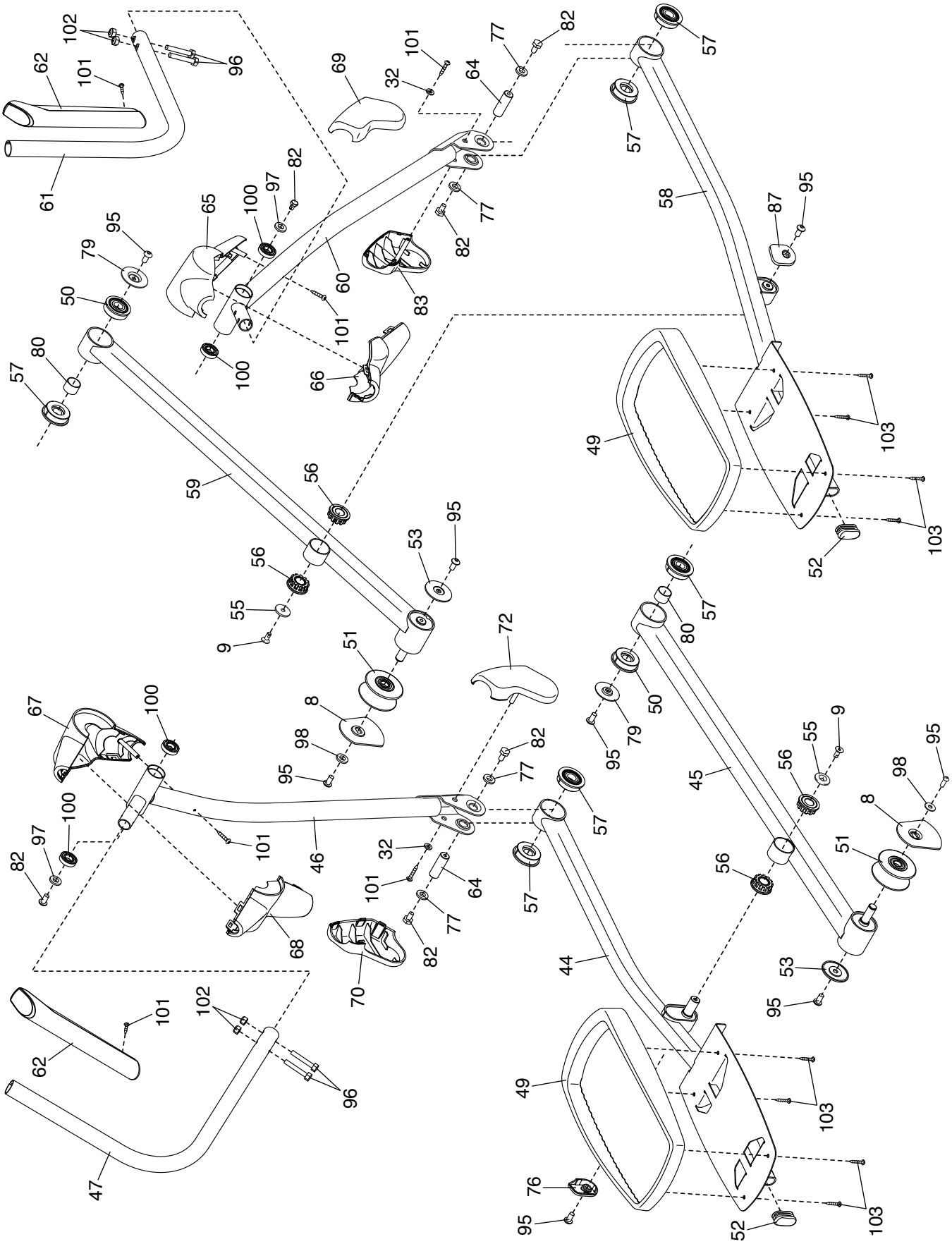

EXPLODED DRAWING C

Model No. PFEVEL49717.1 R0717A

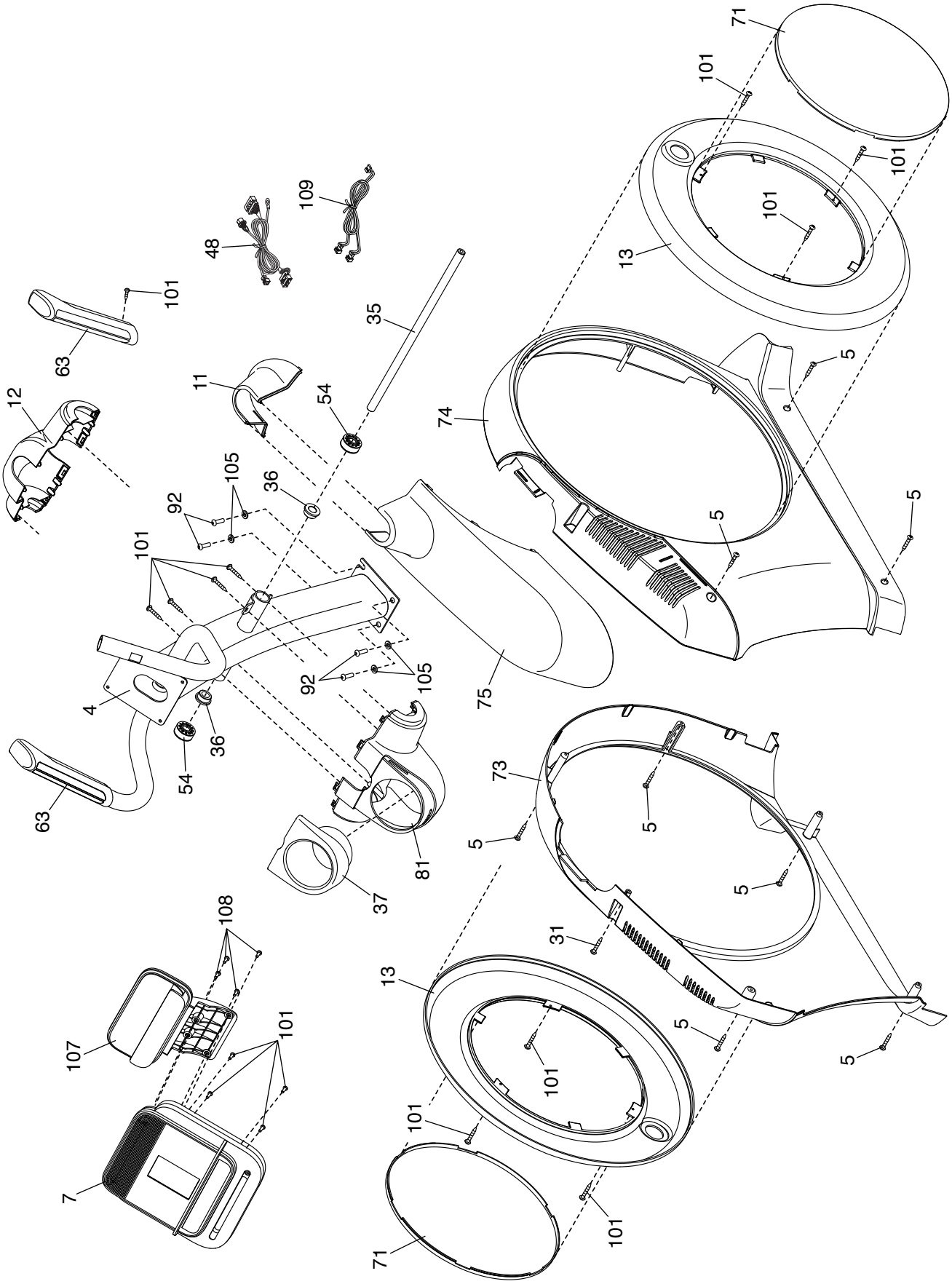

ORDERING REPLACEMENT PARTS

To order replacement parts, please see the front cover of this manual. To help us assist you, be prepared to provide the following information when contacting us:

- the model number and serial number of the product (see the front cover of this manual)
- the name of the product (see the front cover of this manual)
- the key number and description of the replacement part(s) (see the PART LIST and the EXPLODED DRAWING near the end of this manual)

RECYCLING INFORMATION

This electronic product must not be disposed of in municipal waste. To preserve the environment, this product must be recycled after its useful life as required by law.

Please use recycling facilities that are authorized to collect this type of waste in your area. In doing so, you will help to conserve natural resources and improve European standards of environmental protection. If you require more information about safe and correct disposal methods, please contact your local city office or the establishment where you purchased this product.

Part No. 389003 R0717A
Printed in China © 2017 ICON Health & Fitness, Inc.