PRO-FORM®
400 SPX

Model No. PFEVEX72918.0
Serial No. _____

Write the serial number in the space above for reference.

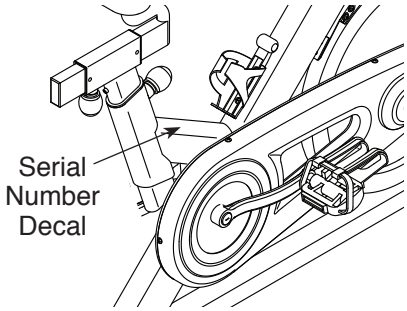

CUSTOMER SERVICE

UNITED KINGDOM
Call: 0330 123 1045
From Ireland: 053 92 36102
Website: iconsupport.eu
E-mail: csuk@iconeurope.com
Write:
ICON Health & Fitness, Ltd.
Unit 4, Westgate Court
Silkwood Park
OSSETT
WF5 9TT
UNITED KINGDOM

AUSTRALIA
Call: 1800 993 770
E-mail: australiacc@iconfitness.com
Write:
ICON Health & Fitness
PO Box 635
WINSTON HILLS NSW 2153
AUSTRALIA

⚠ CAUTION

Read all precautions and instructions in this manual before using this equipment. Keep this manual for future reference.

USER'S MANUAL

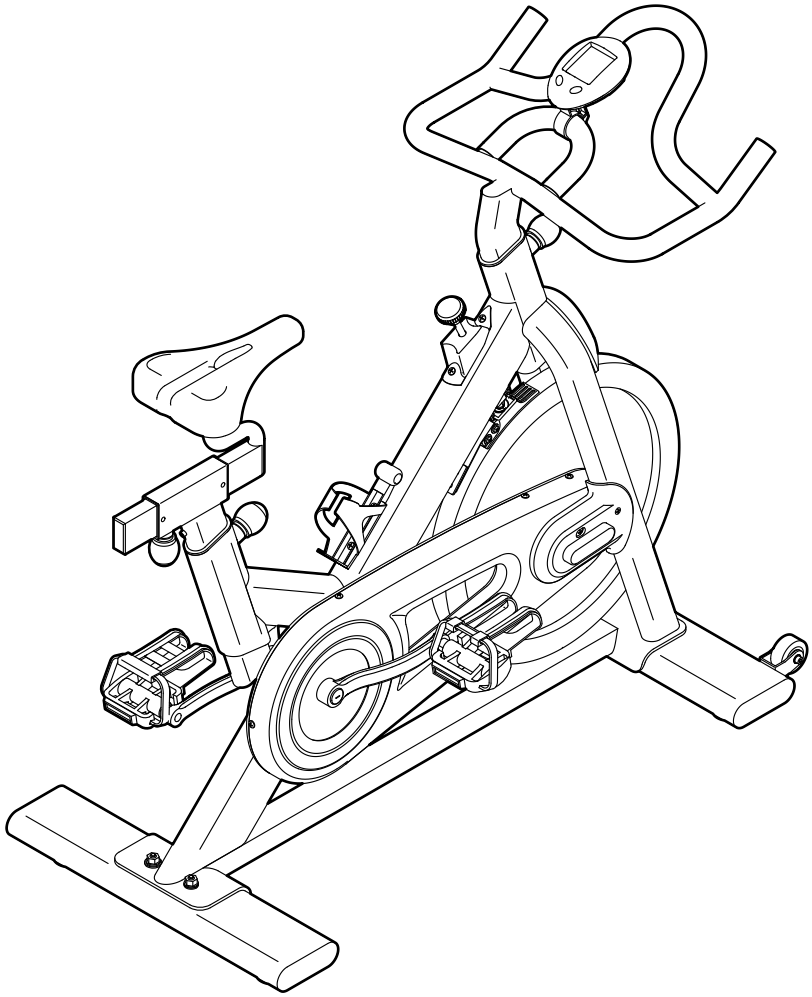

iconeurope.com

TABLE OF CONTENTS

WARNING DECAL PLACEMENT 2
IMPORTANT PRECAUTIONS 3
BEFORE YOU BEGIN 4
ASSEMBLY 5
HOW TO USE THE EXERCISE BIKE 11
EXERCISE GUIDELINES 15
PART LIST 18
EXPLODED DRAWING 19
ORDERING REPLACEMENT PARTS . . . . . Back Cover
RECYCLING INFORMATION . . . . . Back Cover

WARNING DECAL PLACEMENT

This drawing shows the location(s) of the warning decal(s). **If a decal is missing or illegible, see the front cover of this manual and request a free replacement decal. Apply the decal in the location shown.** Note: The decal(s) may not be shown at actual size.

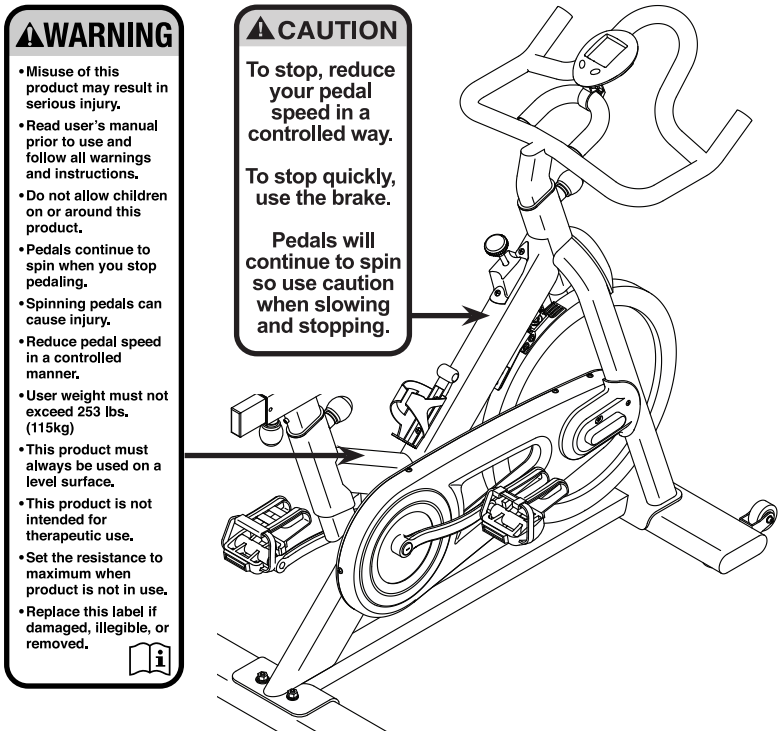

IMPORTANT PRECAUTIONS

⚠ WARNING: To reduce the risk of serious injury, read all important precautions and instructions in this manual and all warnings on your exercise bike before using your exercise bike. ICON assumes no responsibility for personal injury or property damage sustained by or through the use of this product.

1. **It is the responsibility of the owner to ensure that all users of the exercise bike are adequately informed of all precautions.**
2. **Before beginning any exercise program, consult your physician. This is especially important for persons over age 35 or persons with pre-existing health problems.**
3. **The exercise bike is not intended for use by persons with reduced physical, sensory, or mental capabilities or lack of experience and knowledge, unless they are given supervision or instruction about use of the exercise bike by someone responsible for their safety.**
4. **Use the exercise bike only as described in this manual.**
5. **The exercise bike is intended for home use only. Do not use the exercise bike in a commercial, rental, or institutional setting.**
6. **Keep the exercise bike indoors, away from moisture and dust. Do not put the exercise bike in a garage or covered patio, or near water.**
7. **Place the exercise bike on a level surface, with a mat beneath it to protect the floor or carpet. Make sure that there is at least 2 ft. (0.6 m) of clearance around the exercise bike.**
8. **Inspect and properly tighten all parts each time the exercise bike is used. Replace any worn parts immediately.**
9. **Keep children under age 13 and pets away from the exercise bike at all times.**
10. **Wear appropriate clothes while exercising; do not wear loose clothes that could become caught on the exercise bike. Always wear athletic shoes for foot protection.**
11. **The exercise bike should not be used by persons weighing more than 253 lbs. (115 kg).**
12. **Be careful when mounting and dismounting the exercise bike.**
13. **Always keep your back straight while using the exercise bike; do not arch your back.**
14. **The exercise bike does not have a freewheel; the pedals will continue to move until the flywheel stops. Reduce your pedaling speed in a controlled way.**
15. **To stop the flywheel quickly, press the resistance knob downward.**
16. **When the exercise bike is not in use, tighten the resistance knob completely to prevent the flywheel from moving.**
17. **To avoid damaging the brake pads, do not lubricate the brake pads.**
18. **Over exercising may result in serious injury or death. If you feel faint, if you become short of breath, or if you experience pain while exercising, stop immediately and cool down.**

BEFORE YOU BEGIN

Thank you for selecting the new PROFORM® 400 SPX exercise bike. Cycling is an effective exercise for increasing cardiovascular fitness, building endurance, and toning the body. The 400 SPX exercise bike provides a selection of features designed to make your workouts at home more effective and enjoyable.

For your benefit, read this manual carefully before you use the exercise bike. If you have questions after reading this manual, please see the front cover of this manual. To help us assist you, note the product model number and serial number before contacting us. The model number and the location of the serial number decal are shown on the front cover of this manual.

Before reading further, please familiarize yourself with the parts that are labeled in the drawing below.

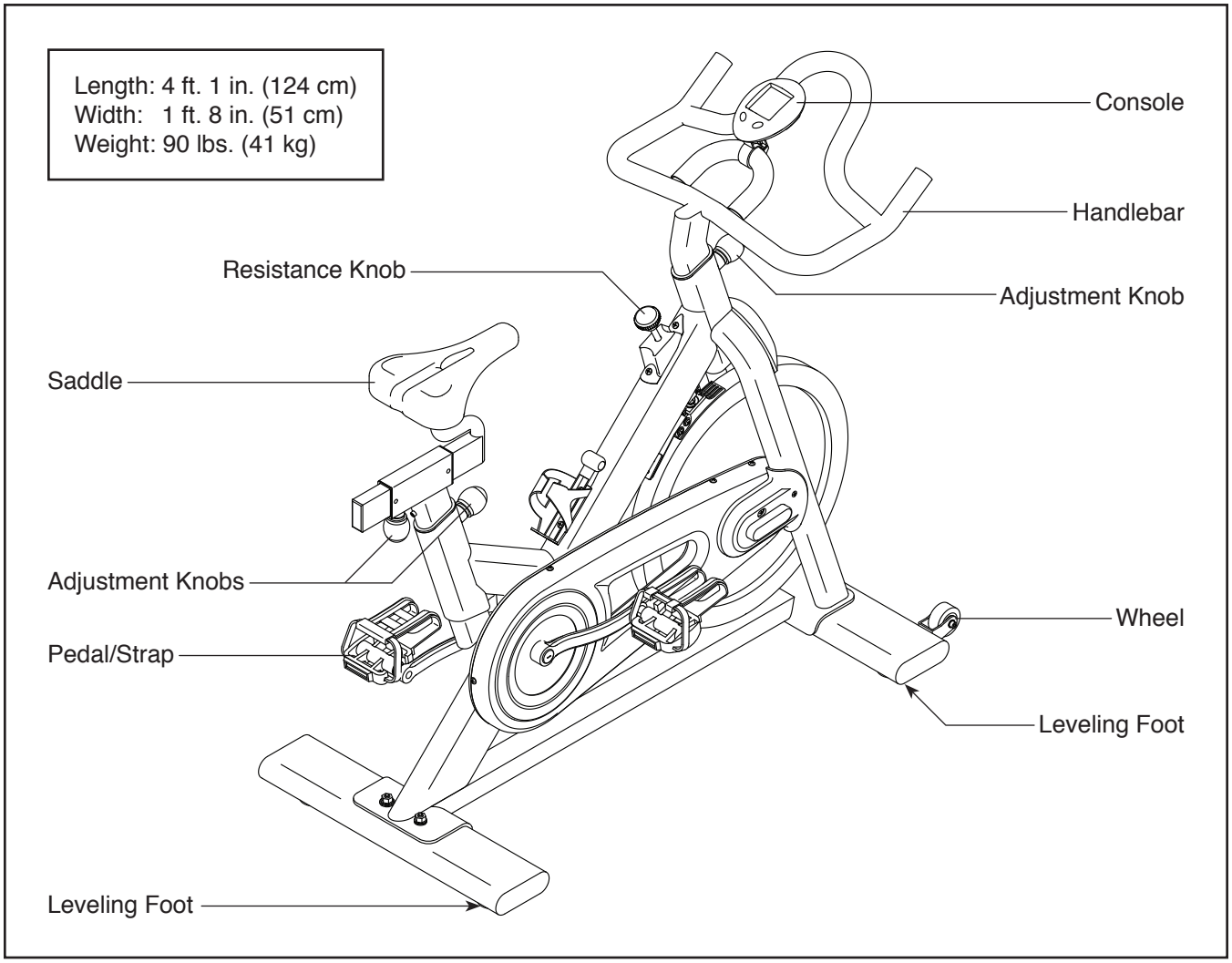

ASSEMBLY

- Assembly requires two persons.
- Place all parts in a cleared area and remove the packing materials. Do not dispose of the packing materials until you finish all assembly steps.
- Left parts are marked “L” or “Left” and right parts are marked “R” or “Right.”
- In addition to the included tool(s), assembly requires the following tool(s):

  one adjustable wrench

  one rubber mallet

  Assembly may be easier if you have a set of wrenches. To avoid damaging parts, do not use power tools.

1. **To register your product and activate your warranty in the UK,** go to iconsupport.eu. If you do not have internet access, call Customer Service (see the front cover of this manual).

   To register your product and activate your warranty in Australia, email or post the following information to the email address or postal address on the front cover of this manual.
   - your receipt (make sure to keep a copy)
   - your name, address, and telephone number
   - the model number, serial number, and name of your product (see the front cover of this manual)

1

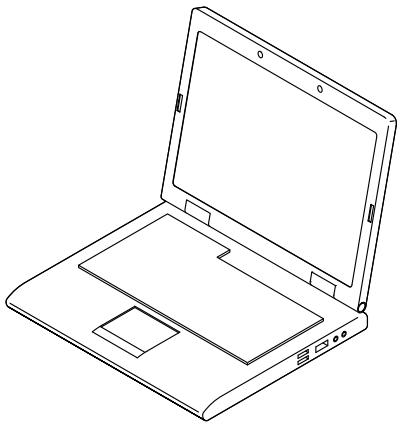

2. If there are shipping tubes (not shown) attached to the front and rear of the Frame (1), remove and discard the shipping tubes and the hardware attaching them.

   Next, orient the Front Stabilizer (4) as shown.

   Attach the Front Stabilizer (4) to the Frame (1) with two M8 x 55mm Carriage Bolts (9), two M8 Washers (3), and two M8 Flange Nuts (2).

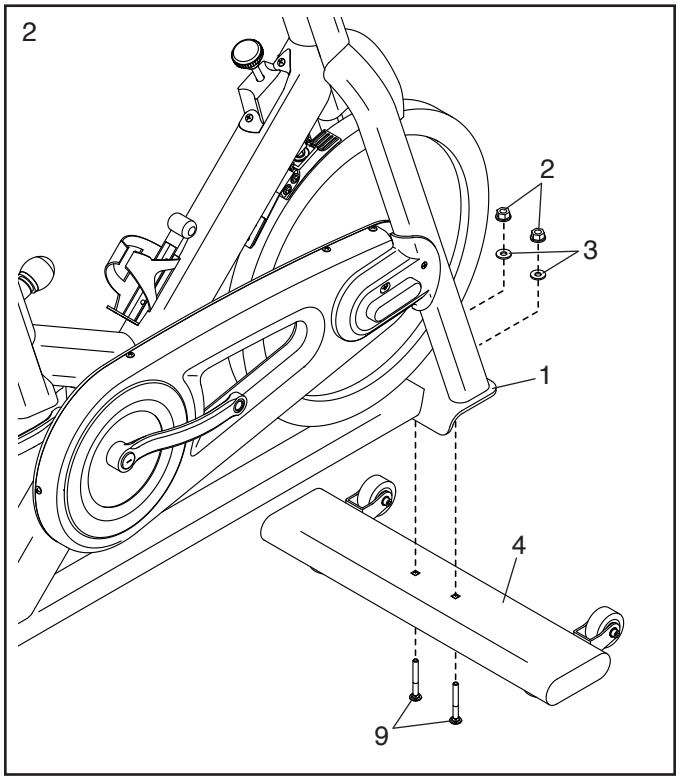

3. Attach the Rear Stabilizer (5) to the Frame (1) with two M8 x 55mm Carriage Bolts (9), two M8 Washers (3), and two M8 Flange Nuts (2).

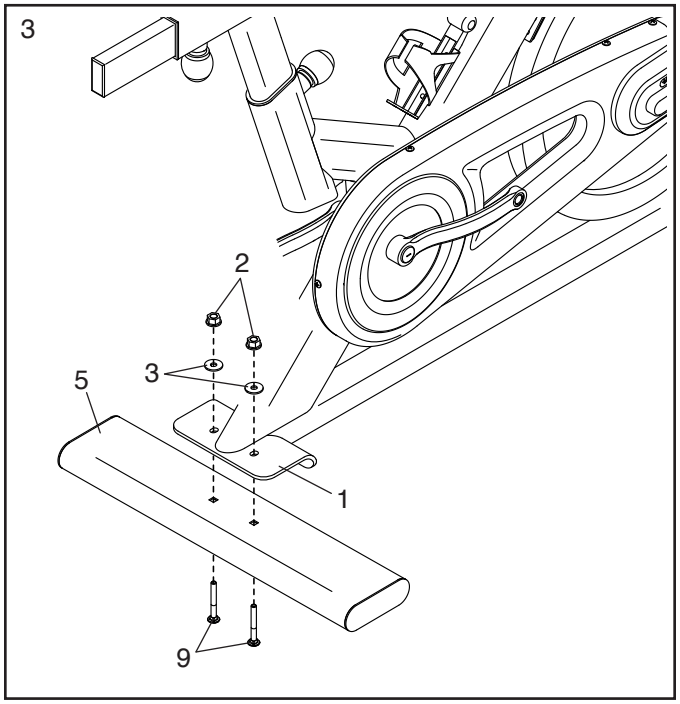

4. Orient the Saddle (31) as shown.

   Slide the Saddle (31) onto the Saddle Carriage (32); **make sure that the Saddle is level and is pointing straight ahead.** Then, tighten the two nuts (A) beneath the Saddle.

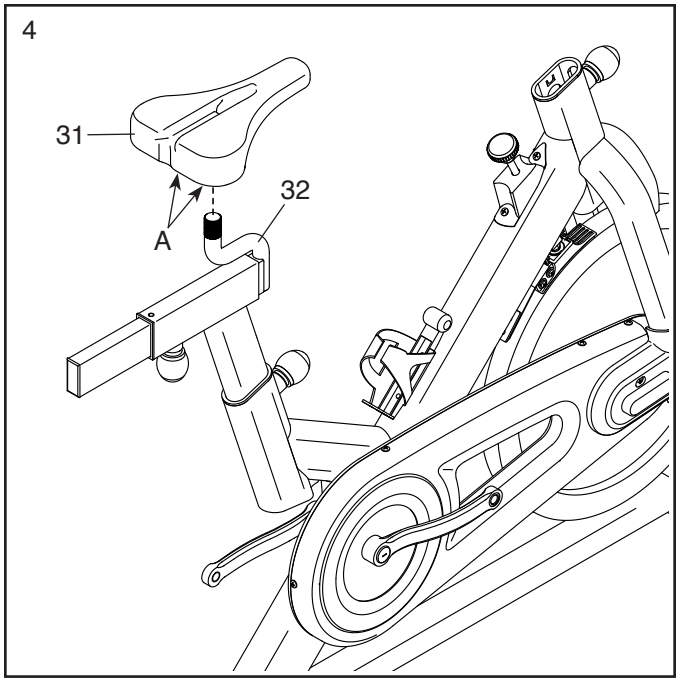

5. Orient the Handlebar (7) as shown.

   Locate the Adjustment Knob (15) on the front of the Frame (1). Loosen the Adjustment Knob and pull it outward. Then, insert the Handlebar (7) into the Frame.

   Move the Handlebar (7) upward or downward to the desired position, release the Adjustment Knob (15) into an adjustment hole in the Handlebar, and then tighten the Adjustment Knob. **Make sure that the Adjustment Knob is firmly engaged in an adjustment hole.**

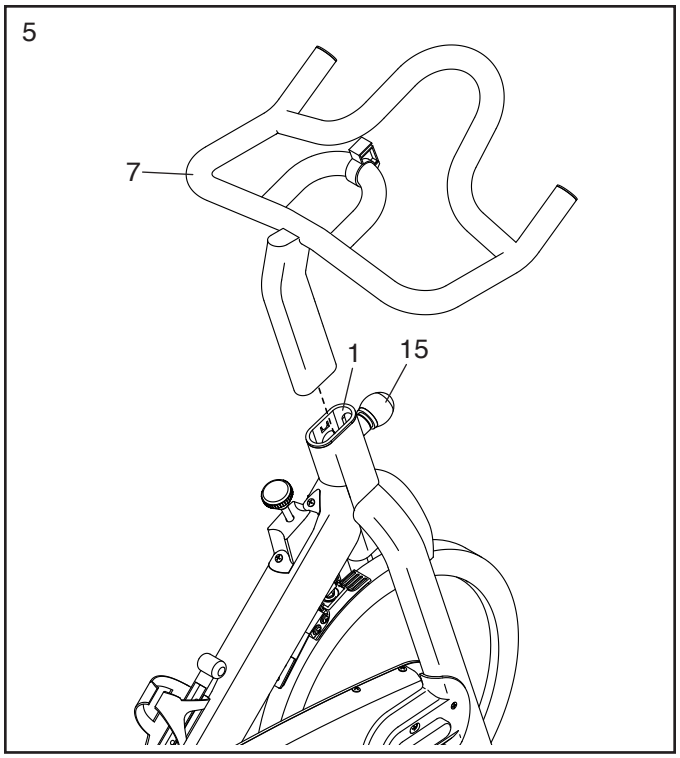

6. Identify the Right Pedal (11). Using an adjustable wrench, **firmly tighten** the Right Pedal **clockwise** into the Right Crank Arm (49).

   Firmly tighten the Left Pedal (not shown) counterclockwise into the Left Crank Arm (not shown). IMPORTANT: You must turn the Left Pedal counterclockwise to attach it.

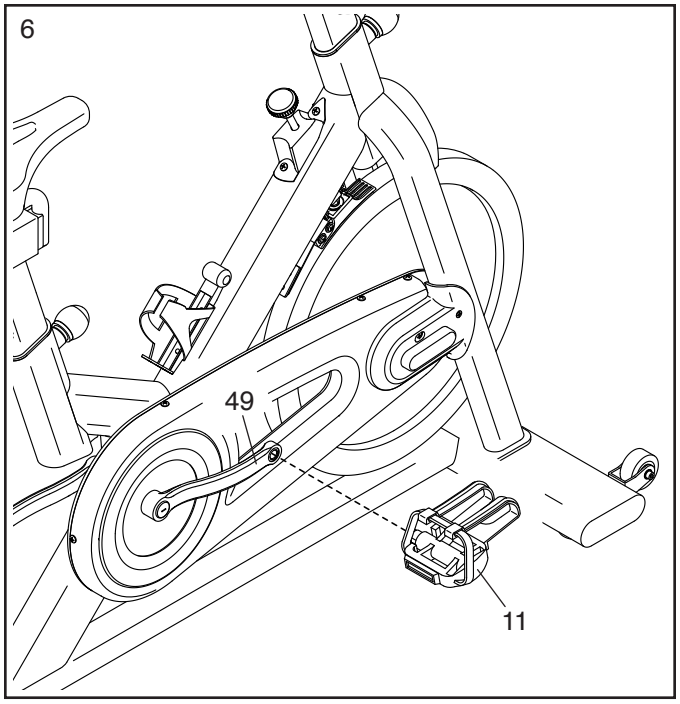

7. The Console (58) can use two AAA batteries (not included); alkaline batteries are recommended. Do not use old and new batteries together or alkaline, standard, and rechargeable batteries together. **IMPORTANT: If the Console has been exposed to cold temperatures, allow it to warm to room temperature before you insert batteries. Otherwise, you may damage the console displays or other electronic components.** Remove the battery cover, and insert the batteries into the battery compartment (B). **Make sure to orient the batteries as shown by the diagram inside the battery compartment.** Then, reattach the battery cover.

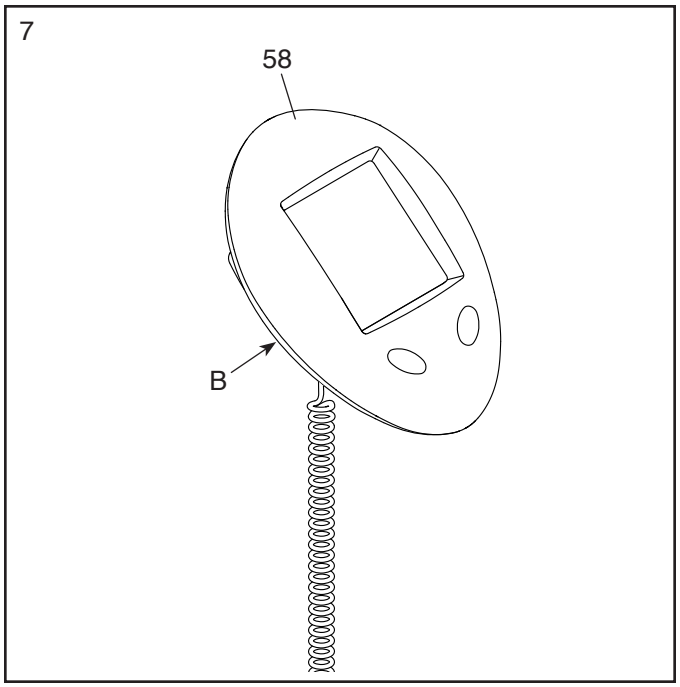

8. Slide the Console (58) onto the Console Bracket (10) on the Handlebar (7).

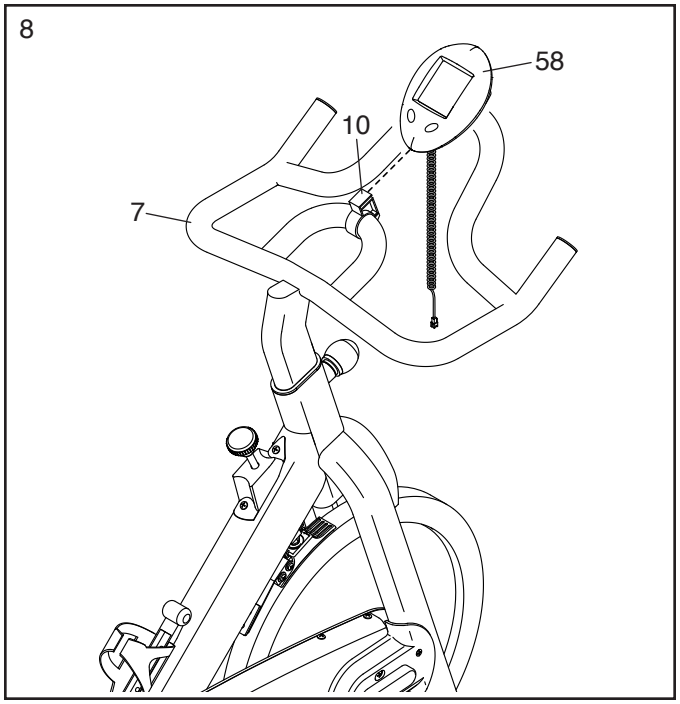

9. Hold the wire (C) on the Reed Switch (59) on the left side of the exercise bike as shown.

   Connect the wire (C) on the Reed Switch (59) to the wire on the Console (58).

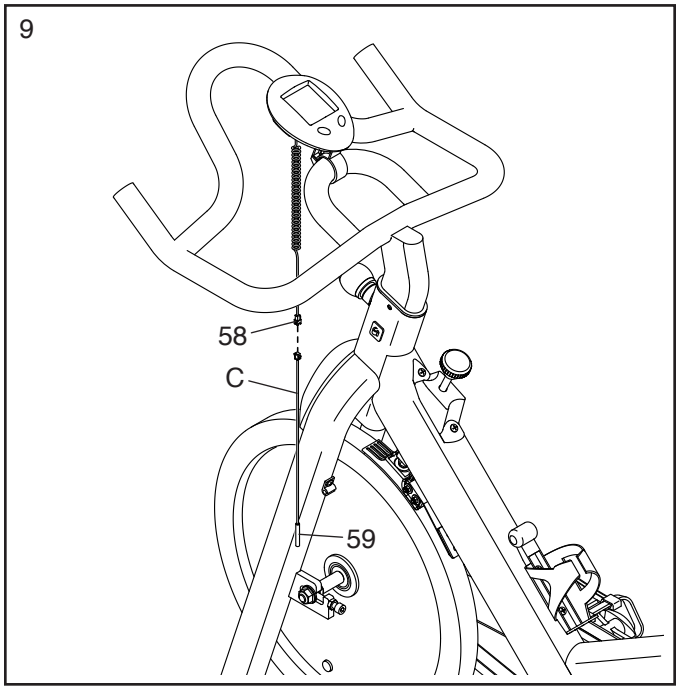

10. Insert the wire (C) on the Reed Switch (59) into the Clip (64) on the left side of the Frame (1).

    Next, insert the Reed Switch (59) into the Clamp (30) on the Frame (1).

    Then, rotate the Flywheel (37) so that the Magnet (20) is facing the Reed Switch (59).

    See the inset drawing. Move the Reed Switch (59) so that it is 1/2" (1–2 cm) away from the Magnet (20).

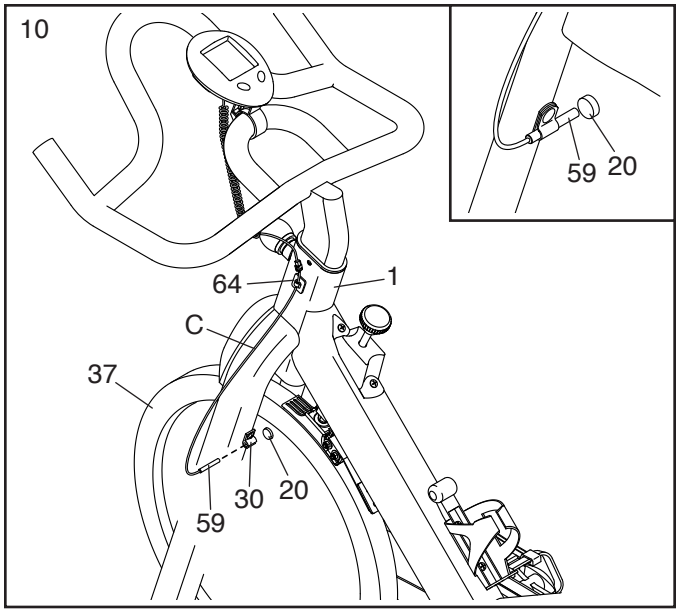

11. **After the exercise bike is assembled, inspect it to make sure that it is assembled correctly and that it functions properly. Make sure that all parts are properly tightened before you use the exercise bike.** Extra parts may be included. Place a mat under the exercise bike to protect the floor.

HOW TO USE THE EXERCISE BIKE

HOW TO LEVEL THE EXERCISE BIKE

If the exercise bike rocks slightly on your floor during use, turn one or both of the leveling feet on the front and rear stabilizers (see the drawing on page 4) until the rocking motion is eliminated.

HOW TO ADJUST THE ANGLE OF THE SADDLE

You can adjust the angle of the saddle to the position that is most comfortable. You can also slide the saddle forward or backward to increase your comfort or to adjust the distance to the handlebar.

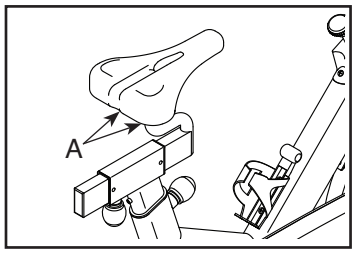

To adjust the saddle, loosen the nuts (A) on the saddle clamp a few turns, and then tilt the saddle upward or downward or slide the saddle forward or backward to the desired position. Then, retighten the nuts.

HOW TO ADJUST THE HORIZONTAL POSITION OF THE SADDLE

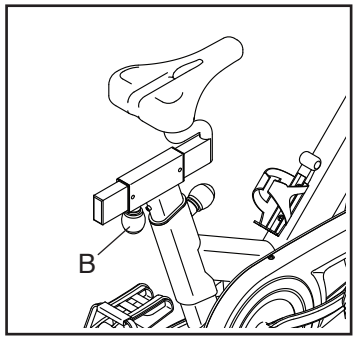

To adjust the position of the saddle, first loosen the adjustment knob (B) and pull it downward. Then, move the saddle forward or backward, release the adjustment knob into an adjustment hole in the saddle carriage, and firmly tighten the adjustment knob. **Make sure that the adjustment knob is engaged in an adjustment hole.**

HOW TO ADJUST THE SADDLE POST

For effective exercise, the saddle should be at the proper height. As you pedal, there should be a slight bend in your knees when the pedals are in the lowest position.

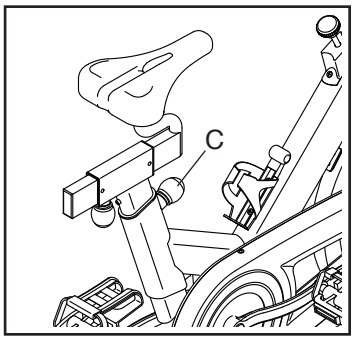

To adjust the height of the saddle post, first loosen the adjustment knob (C) and pull it outward. Then, move the saddle post upward or downward, release the adjustment knob into an adjustment hole in the saddle post, and firmly tighten the adjustment knob. **Make sure that the adjustment knob is engaged in an adjustment hole.**

HOW TO ADJUST THE HANDLEBAR

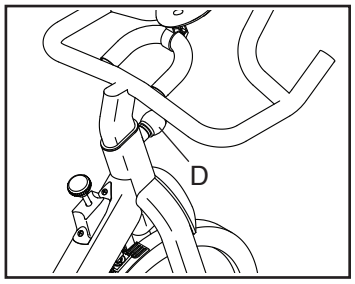

To adjust the height of the handlebar, first loosen the adjustment knob (D) and pull it outward. Then, move the handlebar upward or downward, release the adjustment knob into an adjustment hole in the handlebar, and firmly tighten the adjustment knob. **Make sure that the adjustment knob is engaged in an adjustment hole.**

HOW TO ADJUST THE PEDALING RESISTANCE

To increase the resistance of the pedals, turn the resistance knob (E) clockwise; to decrease the resistance, turn the resistance knob counterclockwise.

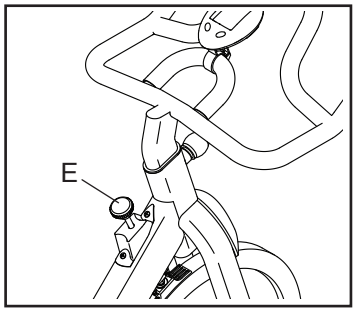

To stop the flywheel, push the resistance knob downward. The flywheel should quickly come to a complete stop.

IMPORTANT: When the exercise bike is not in use, tighten the resistance knob completely.

HOW TO MAINTAIN THE EXERCISE BIKE

Regular maintenance is important for optimal performance and to reduce wear. Inspect and properly tighten all parts each time the exercise bike is used. Replace any worn parts immediately.

To clean the exercise bike, use a damp cloth and a small amount of mild detergent. **IMPORTANT: To avoid damage to the console, keep liquids away from the console and keep the console out of direct sunlight.**

HOW TO TROUBLESHOOT THE CONSOLE

If the console display becomes dim, replace the batteries (see assembly step 7 on page 8); most console problems are the result of low batteries.

HOW TO ADJUST THE REED SWITCH

If the console does not display correct feedback, the reed switch should be adjusted.

To adjust the reed switch, see assembly step 10 on page 10. Slide the Reed Switch (59) slightly closer to or away from the Magnet (20). Then, turn the Flywheel (37) for a moment.

Repeat these actions until the console displays correct feedback.

FEATURES OF THE CONSOLE

The easy-to-use console features six modes that provide instant exercise feedback during your workouts.

Scan (SCAN)—This mode displays the time, speed, distance, calories, and odometer modes, for a few seconds each, in a repeating cycle.

Time (TIME)—This mode displays the elapsed time. Note: If you set a time goal (see step 2 on this page), this display will show the time remaining in your workout.

Speed (SPEED)—This mode displays your pedaling speed, in kilometers per hour.

Distance (DIS)—This mode displays the distance that you have pedaled during your workout, in kilometers. Note: If you set a distance goal (see step 2 on this page), this display will show the distance remaining in your workout.

Calories (CAL)—This mode displays the approximate number of calories you have burned during your workout. Note: If you set a calorie-burning goal (see step 2 on this page), this display will show the number of calories yet to be burned in your workout.

Odometer (ODO)—This mode displays the total distance, in kilometers, that has been pedaled since the odometer was last reset. Note: To reset the odometer, remove the batteries from the console and then reinsert them.

HOW TO USE THE CONSOLE

Make sure that batteries (not included) are installed in the console (see assembly step 7 on page 8). If there is a sheet of plastic on the console, remove the plastic.

1. **Turn on the console.**

   To turn on the console, press any button on the console or simply begin pedaling.

2. **Set a workout goal if desired.**

   To set a time, distance, or calorie-burning goal for your workout, press the Mode button repeatedly until the word TIME, DIS, or CAL appears in the display. **Make sure that the word SCAN does not appear in the display.**

   Next, press the Set button repeatedly to set a goal. To set a goal quickly, hold down the Set button. To reset the goal, press and hold the Mode button until zeros appear in the display.

3. **Begin pedaling and follow your progress with the display.**

   Scan mode—To select the scan mode, press the Mode button repeatedly until the word SCAN appears in the display.

Time, speed, distance, calories, or odometer mode—To select one of these modes for continuous display, press the Mode button repeatedly until the name of the desired mode appears in the display. Make sure that the word SCAN does not appear in the display.

As you exercise, the console will provide instant feedback about your workout.

When a workout goal is not set, an upward-pointing arrow will appear in the display when the time, distance, or calories mode is selected. **When a workout goal is set,** a downward-pointing arrow will appear in the display when the time, distance, or calories mode is selected.

If you have set a workout goal, the display will count down and show zeros when you reach your goal; if you continue to exercise, the display will begin to count upward.

4. **When you are finished exercising, the console will turn off automatically.**

   If the pedals do not move for a few seconds, the console will pause.

   The console has an auto-off feature. If the pedals do not move and the console buttons are not pressed for a few minutes, the power will turn off automatically to save the batteries.

EXERCISE GUIDELINES

⚠WARNING: Before beginning this or any exercise program, consult your physician. This is especially important for persons over age 35 or persons with pre-existing health problems.

These guidelines will help you to plan your exercise program. For detailed exercise information, obtain a reputable book or consult your physician. Remember, proper nutrition and adequate rest are essential for successful results.

EXERCISE INTENSITY

Whether your goal is to burn fat or to strengthen your cardiovascular system, exercising at the proper intensity is the key to achieving results. You can use your heart rate as a guide to find the proper intensity level. The chart below shows recommended heart rates for fat burning and aerobic exercise.

165	*155*	*145*	*140*	*130*	*125*	*115*	♥
145	*138*	*130*	*125*	*118*	*110*	*103*	♥
125	*120*	*115*	*110*	*105*	*95*	*90*	♥
20	*30*	*40*	*50*	*60*	*70*	*80*	

To find the proper intensity level, find your age at the bottom of the chart (ages are rounded off to the nearest ten years). The three numbers listed above your age define your "training zone." The lowest number is the heart rate for fat burning, the middle number is the heart rate for maximum fat burning, and the highest number is the heart rate for aerobic exercise.

Burning Fat—To burn fat effectively, you must exercise at a low intensity level for a sustained period of time. During the first few minutes of exercise, your body uses carbohydrate calories for energy. Only after the first few minutes of exercise does your body begin to use stored fat calories for energy. If your goal is to burn fat, adjust the intensity of your exercise until your heart rate is near the lowest number in your training zone. For maximum fat burning, exercise with your heart rate near the middle number in your training zone.

Aerobic Exercise—If your goal is to strengthen your cardiovascular system, you must perform aerobic exercise, which is activity that requires large amounts of oxygen for prolonged periods of time. For aerobic exercise, adjust the intensity of your exercise until your heart rate is near the highest number in your training zone.

HOW TO MEASURE YOUR HEART RATE

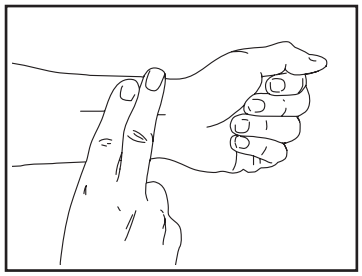

To measure your heart rate, exercise for at least four minutes. Then, stop exercising and place two fingers on your wrist as shown. Take a six-second heartbeat count, and multiply the result by 10 to find your heart rate. For example, if your six-second heartbeat count is 14, your heart rate is 140 beats per minute.

WORKOUT GUIDELINES

Warming Up—Start with 5 to 10 minutes of stretching and light exercise. A warm-up increases your body temperature, heart rate, and circulation in preparation for exercise.

Training Zone Exercise—Exercise for 20 to 30 minutes with your heart rate in your training zone. (During the first few weeks of your exercise program, do not keep your heart rate in your training zone for longer than 20 minutes.) Breathe regularly and deeply as you exercise; never hold your breath.

Cooling Down—Finish with 5 to 10 minutes of stretching. Stretching increases the flexibility of your muscles and helps to prevent post-exercise problems.

EXERCISE FREQUENCY

To maintain or improve your condition, complete three workouts each week, with at least one day of rest between workouts. After a few months of regular exercise, you may complete up to five workouts each week, if desired. Remember, the key to success is to make exercise a regular and enjoyable part of your everyday life.

SUGGESTED STRETCHES

The correct form for several basic stretches is shown at the right. Move slowly as you stretch; never bounce.

1. Toe Touch Stretch

Stand with your knees bent slightly and slowly bend forward from your hips. Allow your back and shoulders to relax as you reach down toward your toes as far as possible. Hold for 15 counts, then relax. Repeat 3 times. Stretches: Hamstrings, back of knees and back.

2. Hamstring Stretch

Sit with one leg extended. Bring the sole of the opposite foot toward you and rest it against the inner thigh of your extended leg. Reach toward your toes as far as possible. Hold for 15 counts, then relax. Repeat 3 times for each leg. Stretches: Hamstrings, lower back and groin.

3. Calf/Achilles Stretch

With one leg in front of the other, reach forward and place your hands against a wall. Keep your back leg straight and your back foot flat on the floor. Bend your front leg, lean forward and move your hips toward the wall. Hold for 15 counts, then relax. Repeat 3 times for each leg. To cause further stretching of the achilles tendons, bend your back leg as well. Stretches: Calves, achilles tendons and ankles.

4. Quadriceps Stretch

With one hand against a wall for balance, reach back and grasp one foot with your other hand. Bring your heel as close to your buttocks as possible. Hold for 15 counts, then relax. Repeat 3 times for each leg. Stretches: Quadriceps and hip muscles.

5. Inner Thigh Stretch

Sit with the soles of your feet together and your knees outward. Pull your feet toward your groin area as far as possible. Hold for 15 counts, then relax. Repeat 3 times. Stretches: Quadriceps and hip muscles.

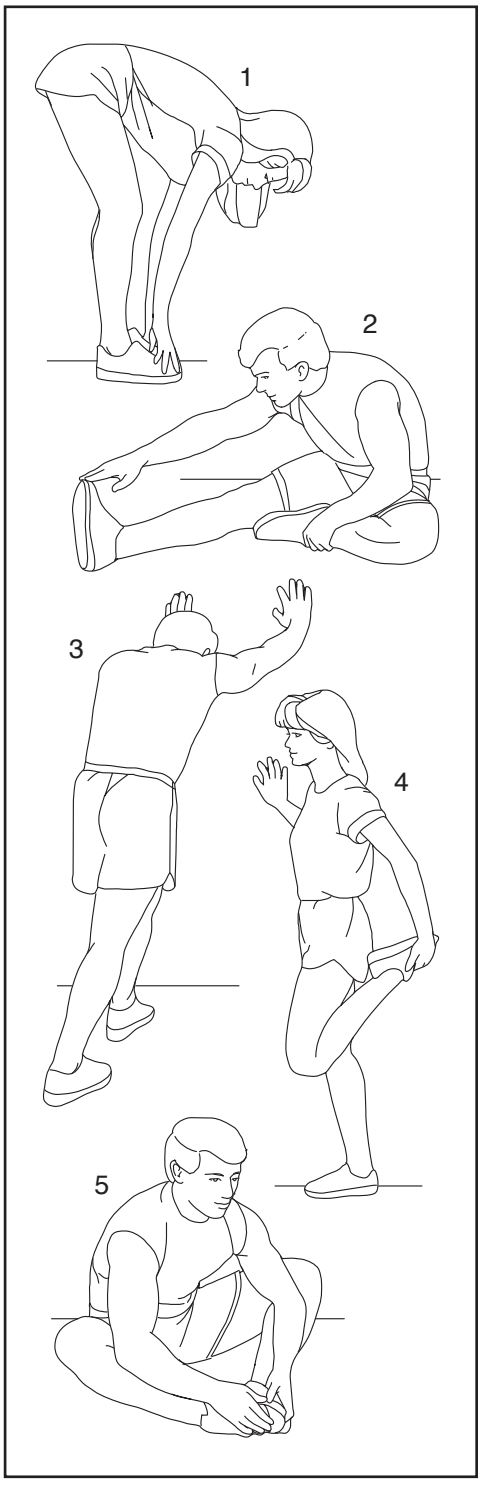

NOTES

PART LIST

Model No. PFEVEX72918.0 R1118B

Key No.	Qty.	Description
1	1	Frame
2	4	M8 Flange Nut
3	4	M8 Washer
4	1	Front Stabilizer
5	1	Rear Stabilizer
6	1	Saddle Post
7	1	Handlebar
8	1	Water Bottle Holder
9	4	M8 x 55mm Carriage Bolt
10	1	Console Bracket
11	1	Right Pedal
12	1	Left Pedal
13	2	M10 Flange Nut
14	10	#8 x 20mm Screw
15	3	Adjustment Knob
16	1	Brake Pad Assembly
17	2	M5 Locknut
18	4	M5 Washer
19	2	M5 x 30mm Bolt
20	1	Magnet
21	1	Brake Bracket
22	2	M10 Washer
23	1	Brake Cover
24	1	Resistance Knob
25	2	Carriage Sleeve
26	1	Spring
27	1	Square Spacer
28	1	Resistance Spacer
29	1	Carriage Cap
30	1	Clamp
31	1	Saddle
32	1	Saddle Carriage
33	1	3/8" Nut
34	1	Lock Ring
35	1	Sprocket
36	1	Hub Set
37	1	Flywheel
38	9	#10 x 12mm Screw
39	1	Outer Chain Guard
40	1	Chain
41	1	Chain Guard Cover
42	1	Inner Chain Guard
43	1	#12 x 15mm Screw
44	1	Brake Bracket Pad
45	2	Crank Cap
46	2	M8 x 16mm Screw
47	1	Left Crank Arm
48	1	Bottom Bracket
49	1	Right Crank Arm/Sprocket
50	2	M6 x 40mm Bolt
51	2	Frame Sleeve
52	2	Wheel
53	2	M6 Locknut
54	2	M8 Nut
55	4	Leveling Foot
56	2	M8 x 40mm Bolt
57	4	3/8" Nut
58	1	Console
59	1	Reed Switch/Wire
60	1	M5 x 12mm Screw
61	1	Brake Cover Spacer
62	4	M6 Washer
63	1	Console Bracket Screw
64	1	Clip
*	–	Assembly Tool
*	–	User's Manual

Note: Specifications are subject to change without notice. For information about ordering replacement parts, see the back cover of this manual. *These parts are not illustrated.

EXPLODED DRAWING

Model No. PFEVEX72918.0 R1118B

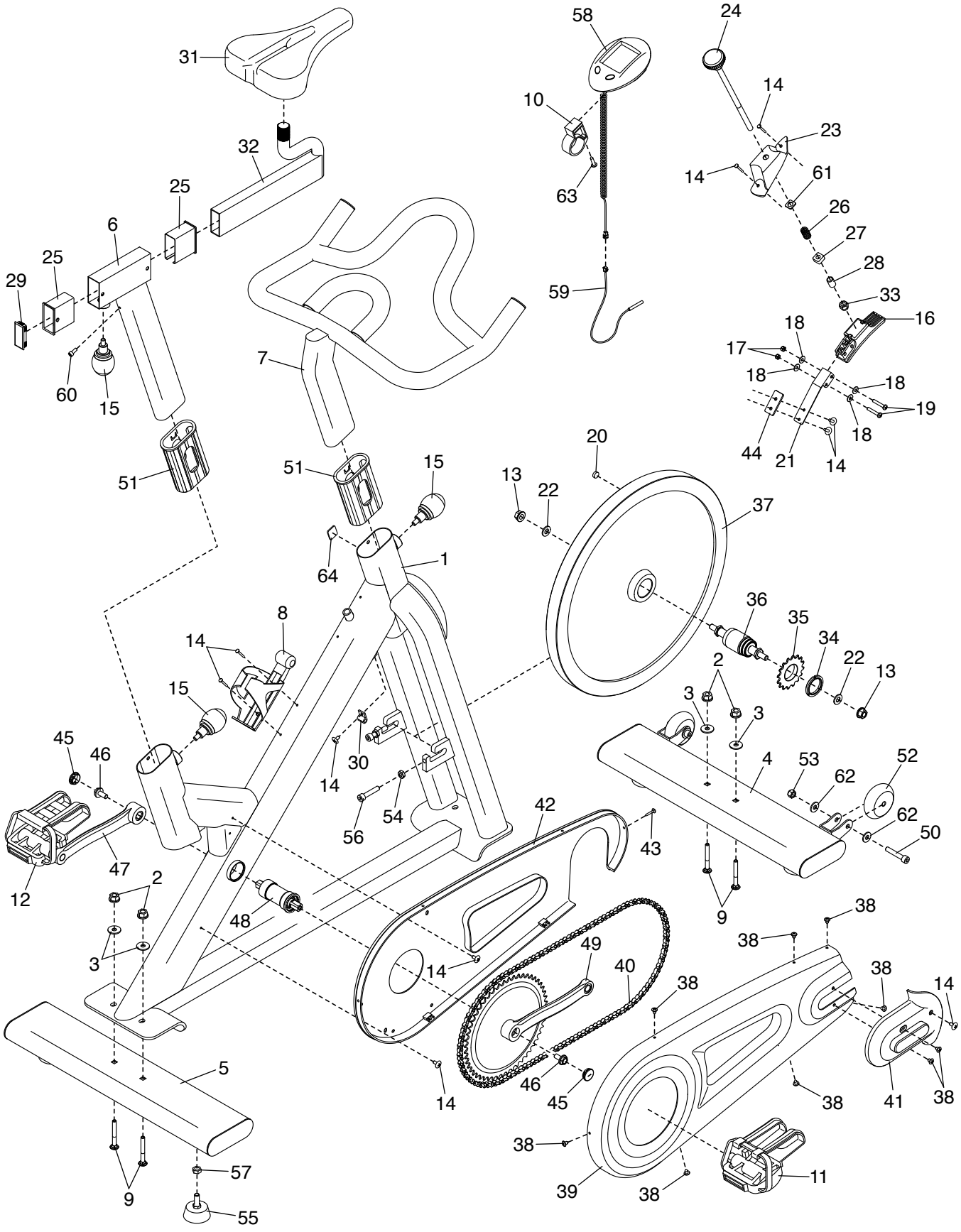

ORDERING REPLACEMENT PARTS

To order replacement parts, please see the front cover of this manual. To help us assist you, be prepared to provide the following information when contacting us:

- the model number and serial number of the product (see the front cover of this manual)
- the name of the product (see the front cover of this manual)
- the key number and description of the replacement part(s) (see the PART LIST and the EXPLODED DRAWING near the end of this manual)

RECYCLING INFORMATION

This electronic product must not be disposed of in municipal waste. To preserve the environment, this product must be recycled after its useful life as required by law.

Please use recycling facilities that are authorized to collect this type of waste in your area. In doing so, you will help to conserve natural resources and improve European standards of environmental protection. If you require more information about safe and correct disposal methods, please contact your local city office or the establishment where you purchased this product.

Part No. 407041 R1118B

Printed in China © 2018 ICON Health & Fitness, Inc.