www.reebokfitnessequipment.com/productsupport

Reebok

Z7 / ZR7 Cross Trainer
Assembly Guide

Reebok

RFE 5073 Z7_ZR7 cross trainer assembly guide.indd 1-1
29/05/2012 17:07

Assembly Guide

Z7 / ZR7 Cross Trainer

A	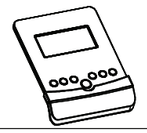	M-8 M-9	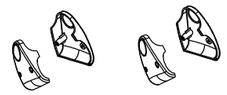
M-1 M-2		M-5 M-6	
M		M-3 M-4	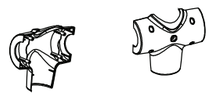
M-10 M-13	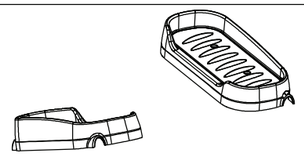		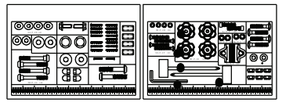
J-4 J	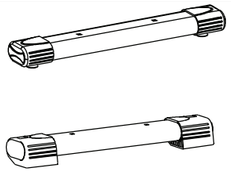	L M-12 M-11	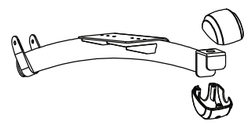
L-2 M-14 M-15	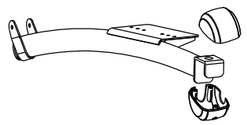	C C-3	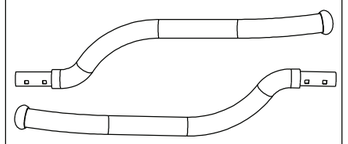
E-L E-R	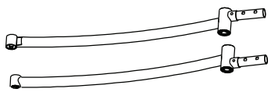	D	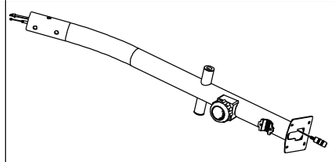
F	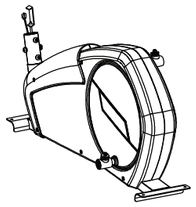	B	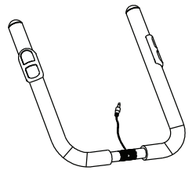

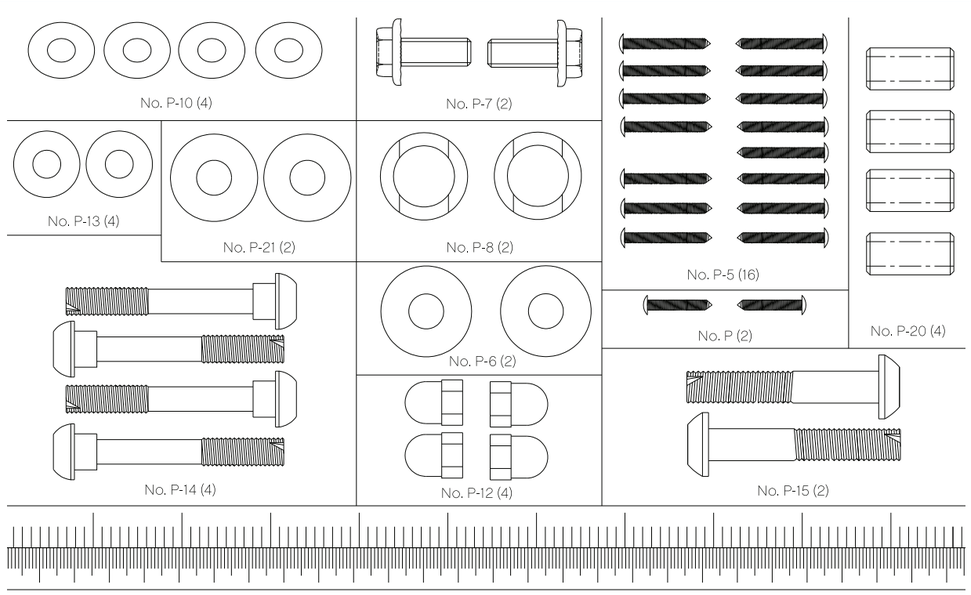

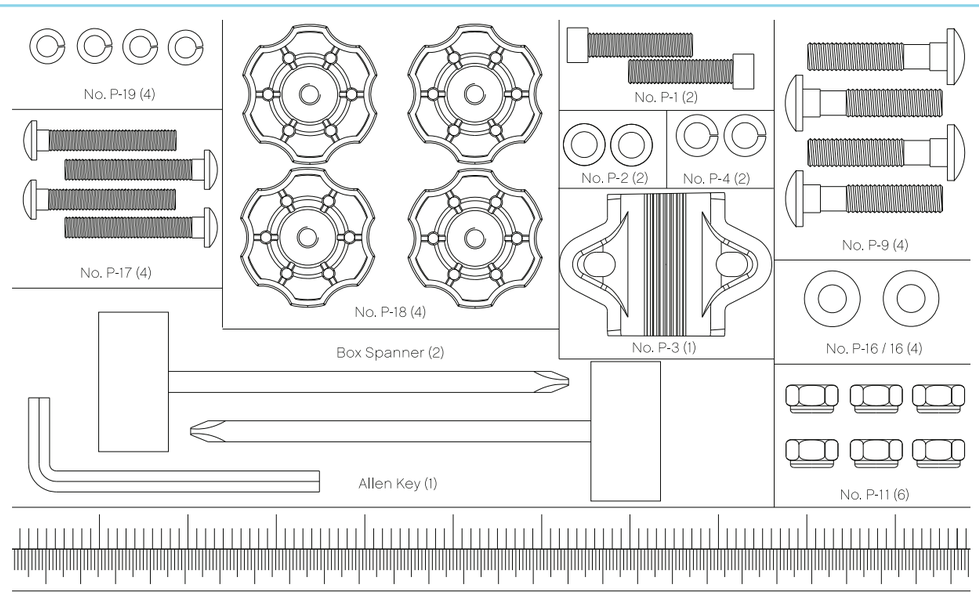

01

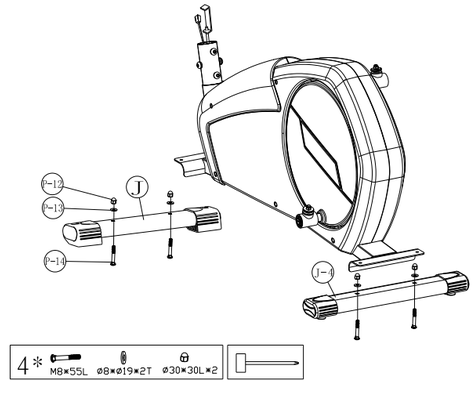

02

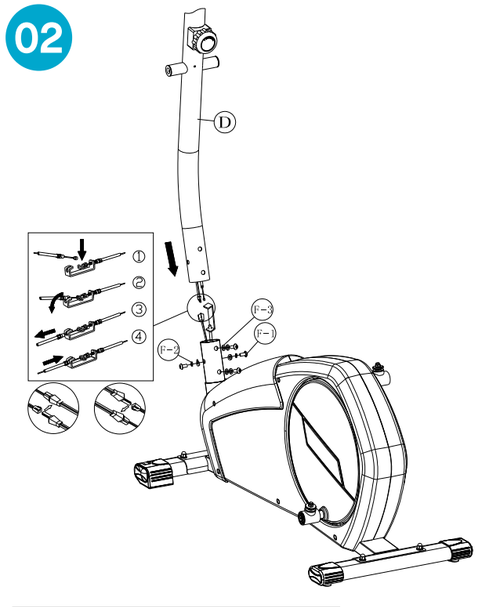

03

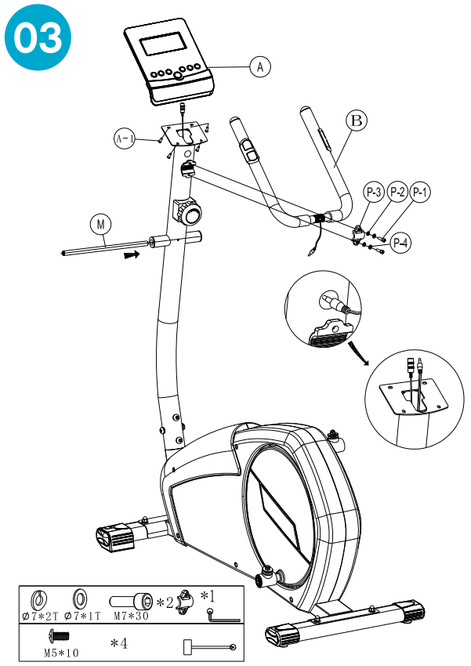

04

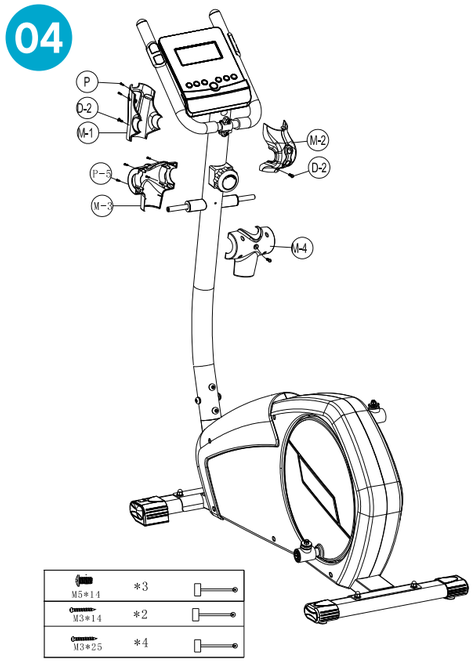

05

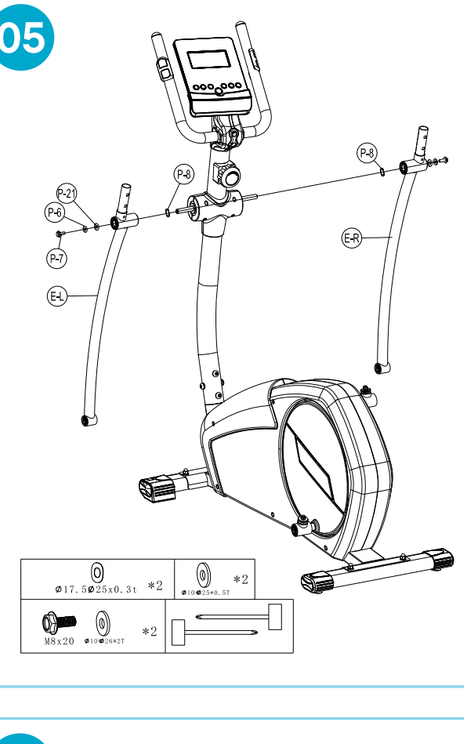

06

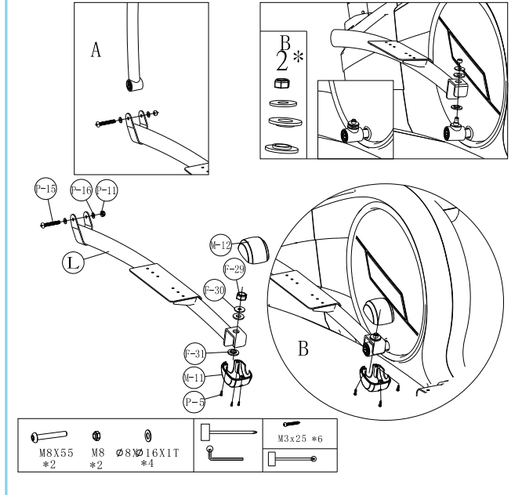

07

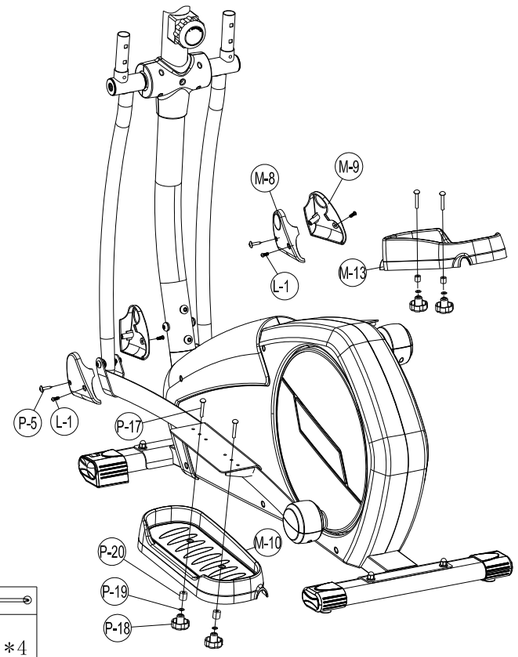

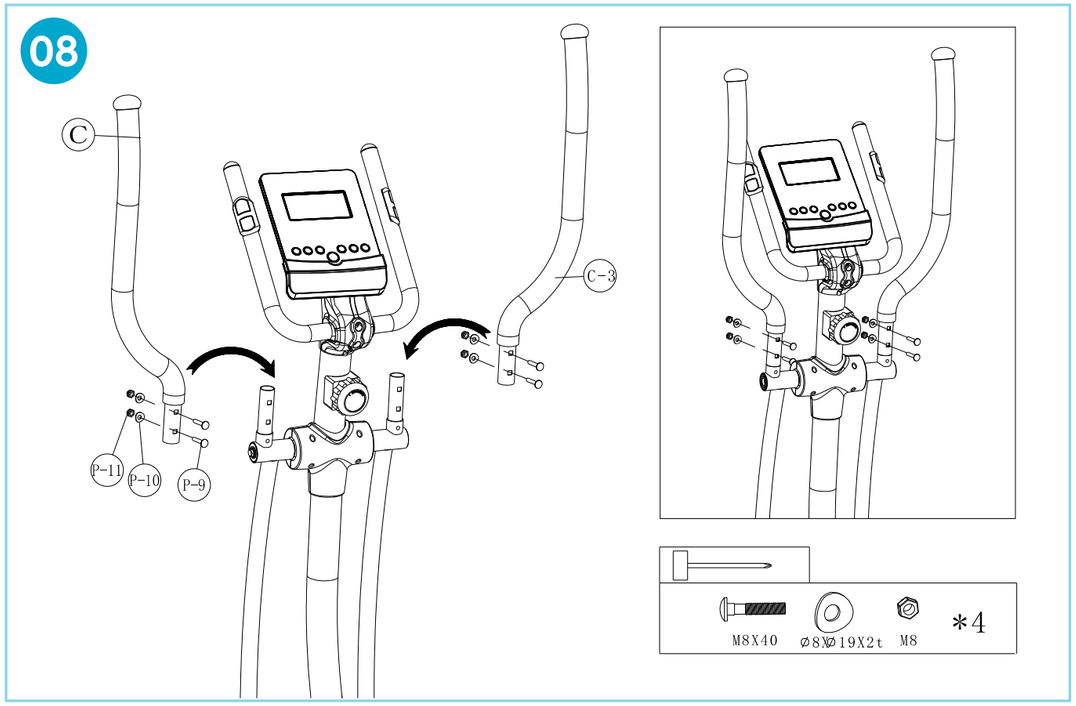

08
C
C-3
P-11
P-10
P-9
M8X40
Ø8XØ19X2t
M8
*4

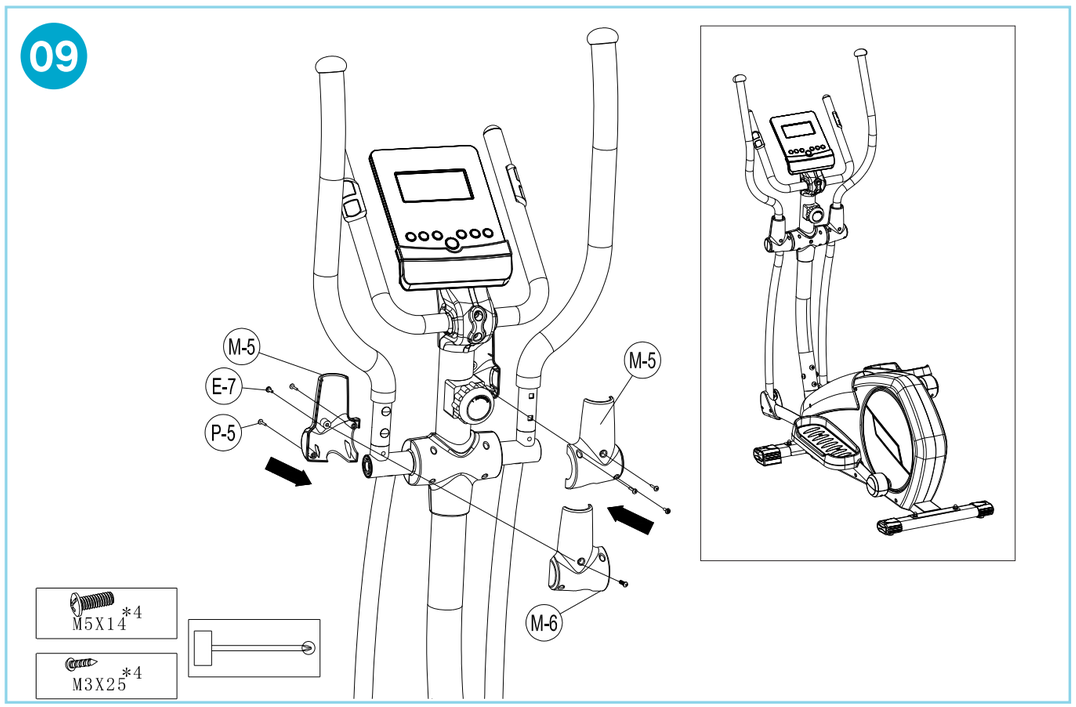

09
M-5
E-7
P-5
M-5
M-6
M5X14 *4
M3X25 *4

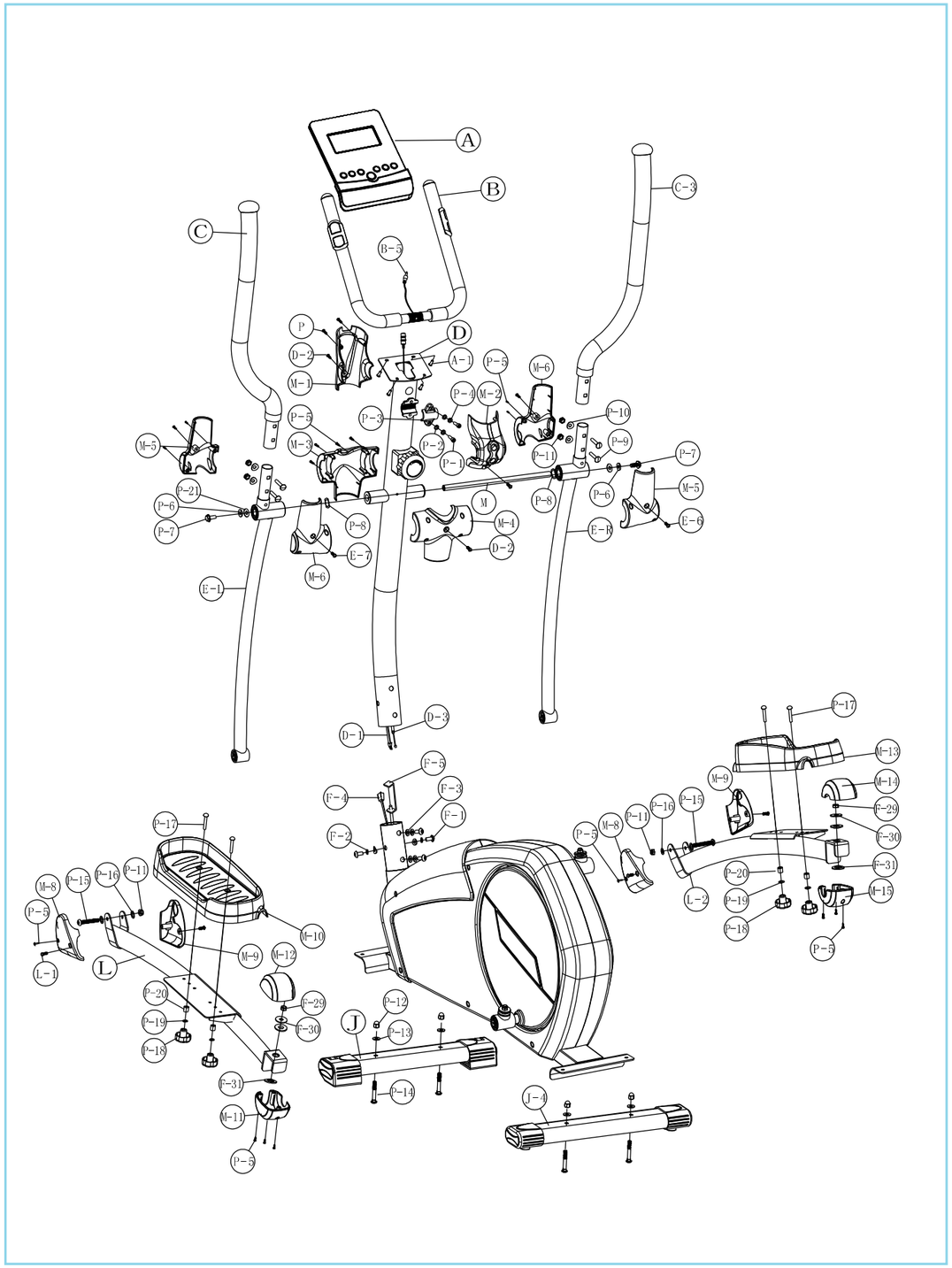

A
B
C
C-3
B-5
D
D-1
D-2
D-3
E-1
E-6
E-7
E-8
F-1
F-2
F-3
F-4
F-5
F-29
F-30
F-31
J
J-4
L
L-1
L-2
M-1
M-2
M-3
M-4
M-5
M-6
M-8
M-9
M-10
M-11
M-12
M-13
M-14
M-15
P-1
P-2
P-3
P-4
P-5
P-6
P-7
P-8
P-9
P-10
P-11
P-12
P-13
P-14
P-15
P-16
P-17
P-18
P-19
P-20
P-21

Exploded Diagram

Z7 / ZR7 Cross Trainer

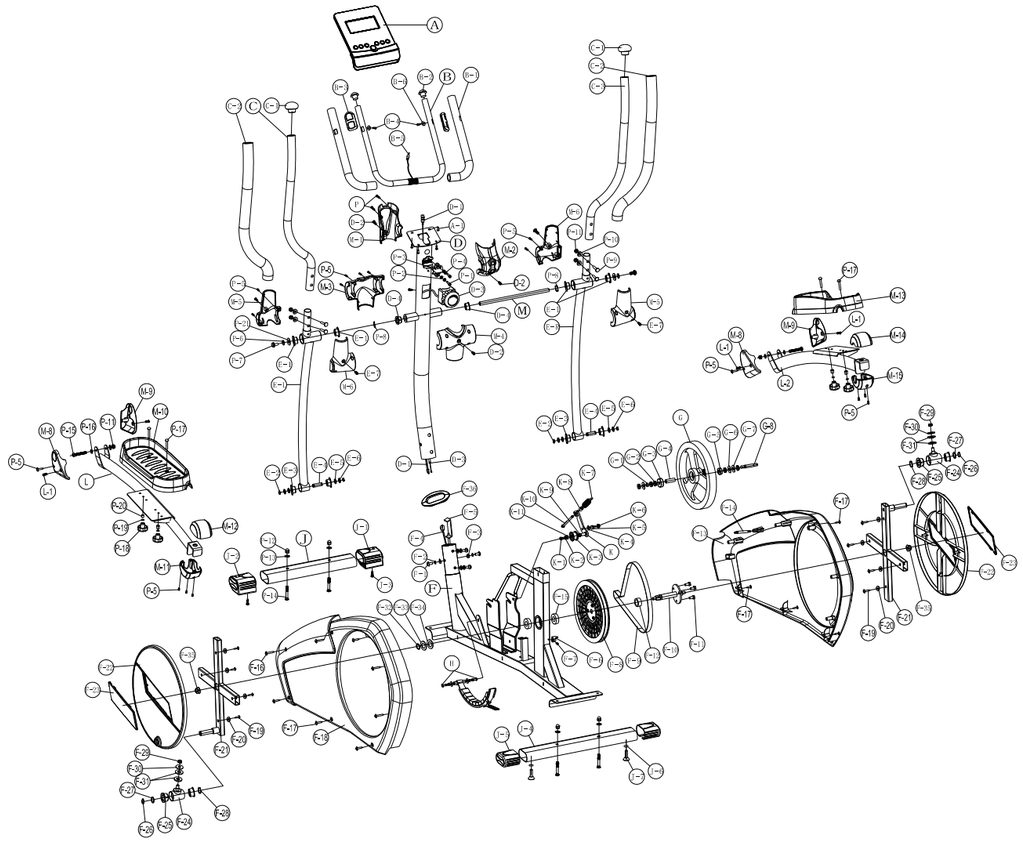

No.	Description	QTY	No.	Description	QTY	No.	Description	QTY
A	Console (incl. A-1)	1	F-18	Side cover, left	1	K-8	Spring fixed base	1
A-1	Screw	4	F-19	Screw	8	K-9	Curved washer	2
B	Handlebar set (incl. B-1~B-6)	1	F-20	Flat washer	8	K-10	Screw	1
B-1	Foam grip	2	F-21	Cross-brace	2	K-11	Flat washer	1
B-2	Handlebar end cap	2	F-22	Disk	2	L	Footplate tube, left	1
B-3	Hand pulse sensor	2	F-23	Disk decorative cover	2	L-1	Screw	4
B-4	Screw	2	F-24	Footplate connector	2	L-2	Footplate tube, right	1
B-5	Hand pulse wire	1	F-25	Bushing	4	M	Handlebar fixed shaft	1
B-6	Washer	2	F-26	C-clip	2	M-1	Handlebar front cover	1
C	Upper Handlebar, left (incl. C-1,-2)	1	F-27	Flat washer	2	M-2	Handlebar rear cover	1
C-1	Handlebar end cap	2	F-28	Curved washer	2	M-3	Cross tube front cover	1
C-2	Foam grip	2	F-29	Nylon nut	2	M-4	Cross tube rear cover	1
C-3	Upper Handlebar, right (incl. C-1,-2)	1	F-30	Flat washer	2	M-5	Upper handlebar front cover	2
D	Handlebar post	1	F-31	Rubber washer	4	M-6	Upper handlebar rear cover	2
D-1	Sensor wire, upper	1	F-32	C-clip	1	M-8	Footplate tube, left front cover	2
D-2	Screw	3	F-33	Curved washer	1	M-9	Footplate tube, right front cover	2
D-3	Tension controller, upper	1	F-34	Flat washer	1	M-10	Footplate, left	1
D-4	Bushing	2	F-35	Pattern nut	2	M-11	Footplate tube rear cover, lower left	1
E-L	Lower handlebar, left	1	F-36	Seal	1	M-12	Footplate tube rear cover, upper left	1
E-R	Lower handlebar, right	1	G	Flywheel set (incl. G-1 -G-8)	1	M-13	Footplate, right	1
E-1	Bushing	4	G-1	Sleeve	1	M-14	Footplate tube rear cover, upper right	1
E-2	C-clip	4	G-2	Nut	1	M-15	Footplate tube rear cover, lower right	1
E-3	Bushing	4	G-3	Bearing	1	P	Screw	2
E-4	Sleeve	2	G-4	Sleeve	5	P-1	Screw	2
E-5	Flat washer	4	G-5	Bearing	1	P-2	Flat washer	2
E-6	Curved washer	4	G-6	Flat washer	1	P-3	Handlebar clamp	1
E-7	Screw	4	G-7	Washer	1	P-4	Spring washer	2
F	Frame	1	G-8	Axle	1	P-5	Screw	16
F-1	Screw	4	H	Magnetic bracket set	1	P-6	Flat washer	2
F-2	Spring washer	4	J	Front stabilizer (incl. J-1 - J-3)	1	P-7	Nylok screw	2
F-3	Semi-circuit washer	4	J-1	End cap with transport wheel, right	1	P-8	Curved washer	2
F-4	Sensor wire, lower	1	J-2	End cap with transport wheel, left	1	P-9	Carriage bolt	4
F-5	Tension controller, lower	1	J-3	Screw	1	P-10	Semi-circuit washer	4
F-6	Sensor fixed base (incl. F-7)	1	J-4	Rear stabilizer (incl. J-5 - J-7)	1	P-11	Nylon nut	6
F-7	Screw	1	J-5	End cap	1	P-12	Cap nut	4
F-8	Drive pulley	1	J-6	Screw nut	2	P-13	Flat washer	4
F-9	Drive belt	1	J-7	Adjustable pad	2	P-14	Carriage bolt	4
F-10	Axle set	1	K	Belt tightener set (incl. K-1 - K-11)	1	P-15	Screw	2
F-11	Screw	3	K-1	Screw	1	P-16	Flat washer	4
F-12	Sleeve	1	K-2	Flat washer	1	P-17	Carriage bolt	4
F-13	Side cover, right (incl. F-14)	1	K-3	Jockey wheel	1	P-18	Footplate knob	4
F-14	Connecting shaft	1	K-4	Flat washer	1	P-19	Spring washer	4
F-15	Bearing	2	K-5	Screw	1	P-20	Sleeve	4
F-16	Screw	4	K-6	Nylon nut	1	P-21	Washer	2
F-17	Screw	8	K-7	Spring	1			

Reebok
Z7ELLIPTICAL

Reebok
Z7ELLIPTICAL